THERMOROSSI

PIDRA 18

INSTALLATION, USE AND MAINTENANCE GUIDE.

.

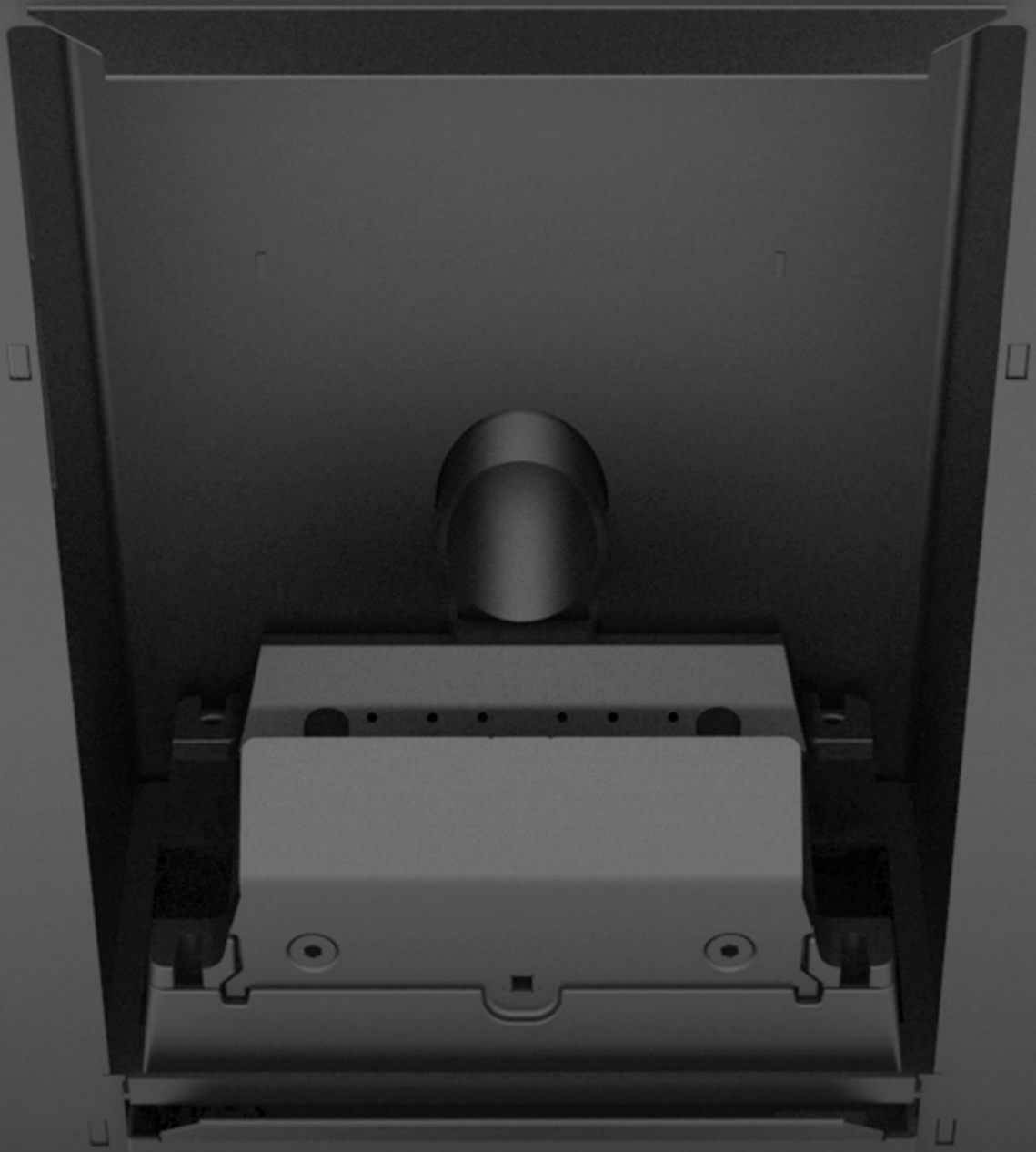

Must read! Important information for safety and correct operation.

INDEX

1 – INTRODUCTION..... 5
2 – TECHNICAL CHARACTERISTICS..... 7
3 – GENERAL DESCRIPTION 9
4 – INSTALLATION.....11
5 – HYDRAULIC CONNECTION 13
6 – USE OF THE APPLIANCE 20
7 – ROOM TEMPERATURE THERMOSTAT / CHRONOTHERMOSTAT (not supplied) 34
8 - CLEANING AND MAINTENANCE 36
9 – SMOKE DISCHARGE TUBE AND VENTILATION OF THE ROOMS.....42
10 – ALARMS.....46
11 - ELECTRICAL WIRING 47
12 – INFORMATION FOR THE SKILLED TECHNICIAN 49

EU Declaration of Conformity (DoC) / Dichiarazione di Conformità UE (DoC)

Company name: **Azienda:**	**THERMOROSSI S.P.A.**	**Postal address:** **Indirizzo:**	**VIA GRUMOLO, N° 4**
Postcode and city: Codice postale e città:	**36011 ARSIERO (VI)**	Telephone number: Numero di telefono:	**0445/741310**
E-mail address: Indirizzo e-mail:	**INFO@THERMOROSSI.IT**		

declare that the DoC is issued under our sole responsibility and belongs to the following product:
dichiara che la dichiarazione viene rilasciata sotto la propria responsabilità e si riferisce al seguente prodotto:

Apparatus model / Product: **Descrizione prodotto:**	Termostufa a pellet Pellet thermo-stove	**Trademark:** **Marchio:**	**THERMOROSSI**
Model: **Modello:**	**PIDRA 18**		

The object of the declaration described above is in conformity with the relevant Union harmonisation legislation:
L'oggetto della dichiarazione di cui sopra è conforme alla pertinente normativa di armonizzazione dell'Unione:

- **Direttiva 2014/30/UE, EMCD**
- **Direttiva 2014/35/UE, LVD**
- **Direttiva 2011/65/UE, RoHS**
- **2014/30/EU Directive, EMCD**
- **2014/35/EU Directive, LVD**
- **2011/65/EU Directive, RoHS**

Sono state applicate le seguenti norme armonizzate e/o specifiche tecniche:
The following harmonised standards and/or technical specifications have been applied:

EN 55014-1
EN 55014-2
EN 61000-3-2
EN 61000-3-3
EN 60335-1
EN 60335-2-102
EN 62233
EN 50581

EN 14785 tests carried out by the notified laboratory Acteco s.r.l. N.B. n°1880

Arsiero, 30/11/2020

Firma/Sign.

THERMOROSSI S.p.A.
Un Amministratore

THERMOROSSI *Fire Lovers*	**DICHIARAZIONE DI PRESTAZIONE IN ACCORDO CON IL REGOLAMENTO (UE) 305/2011** ***DECLARATION OF PERFORMANCE ACCORDING TO REGULATION (EU) 305/2011***	**N° 10**

1	Codice di identificazione unico del prodotto-tipo: **PIDRA 18** *Unique identification code of the product type:*	2	Modello, lotto, serie ai sensi dell'articolo 11, paragrafo 4: **PIDRA 18** *Model, batch or serial number required under Article 11(4):*
3	Usi previsti del prodotto da costruzione, conformemente alla relativa specifica tecnica armonizzata: *Intended uses of the construction product, in accordance with the applicable harmonised technical specification:* **Apparecchio per il riscaldamento domestico, con acqua, alimentato a pellet di legno** / *Residential space heating appliance with water fired by wood pellets*		
4	Nome registrato e indirizzo del fabbricante ai sensi dell'articolo 11, paragrafo 5: *Namek and contact address of the manufacturer as required pursuant Article 11(5):* **THERMOROSSI S.P.A. Via Grumolo, n° 4 36011 Arsiero (VI)**	5	Nome e indirizzo del mandatario ai sensi dell'articolo 12, paragrafo 2: *Name and address of the agent as required pursuant Article 12(2):* -
6	Sistema di valutazione e verifica della costanza della prestazione del prodotto da costruzione di cui all'allegato V: **Sistema 3 e 4** System of assessment and verification of constancy of performance of the construction product as set out in Annex V: **System 3 and 4**		
7	Laboratorio notificato: *Notified laboratory:* **ACTECO S.r.l. N.B. n°1880**		Numero del rapporto di prova secondo il sistema 3 / Test report number based on System 3: **1880-CPR-014-20**

	Prestazione dichiarata / Declared performance	
8	Specifica tecnica armonizzata/*Harmonized technical specification:*	**EN 14785:2006**
	Caratteristiche Essenziali / *Essential characteristics*	**Prestazione / Performance**
	Reazione al fuoco / *Reaction to fire*	**A1**
	Distanza da materiali combustibili *Distance to combustible materials*	Minime distanze / *Minimum distances* (mm): posteriore/*rear* = **200** lati/*sides* = **200** frontale / *front* = **800** soffitto/*ceiling* = - pavimento / *floor* = -
	Rischio di fuoriuscita di braci incandescenti / *Risk of burning fuel falling out*	**Conforme/*Compliant***
	Temperatura superficiale/*Surface temperature*	**Conforme/*Compliant***
	Sicurezza elettrica / *Electrical safety*	**Conforme/*Compliant***
	Pulizia / *Cleanability*	**Conforme/*Compliant***
	Emissione di prodotti della combustione /*Emission of combustion products*	**CO = 52 mg/m^3** a potenza termica nominale / *CO at Nominal heat output* **CO = 215 mg/m^3** a potenza termica ridotta / *CO at Reduced heat output*
	Pressione massima di esercizio / *Maximum operating pressure*	**2,5 bar**
	Temperatura fumi a potenza termica nominale / *Flue gas temperature at nominal heat output*	**T 99 °C**
	Resistenza meccanica (per sopportare il camino) / *Mechanical resistance (to carry a chimney)*	**NPD {Nessuna Prestazione Determinata}**
	Potenza termica nominale / *Nominal heat output* Potenza termica resa in ambiente / *Room heating output* Potenza termica ceduta all'acqua / *Water heating output*	**17,80 kW** **4,00 kW** **13,80 kW**
	Rendimento / *Efficiency*	**95,60 %** alla potenza termica nominale / *Nominal heat output* **96,70 %** alla potenza termica ridotta / *Reduced heat output*

9 La prestazione del prodotto di cui ai punti 1 e 2 è conforme alla prestazione dichiarata di cui al punto 8.
Si rilascia la presente dichiarazione di prestazione sotto la responsabilità esclusiva del fabbricante di cui al punto 4
The performance of the product identified in points 1 and 2 is in conformity with the declared performance in point 8.
This declaration of performance is issued under the sole responsibility of the manufacturer identified in point 4.
Arsiero, 30/11/2020

Firma/Signature:

THERMOROSSI S.p.A.
Un Amministratore

IT – SCHEDA PRODOTTO (UE 2015/1186) **EN – PRODUCT FICHE (EU 2015/1186)** **FR – FICHE PRODUIT (UE 2015/1186)** **NL – PRODUCTGEGEVENSBLAD (EU 2015/1186)** **DE – PRODUKTDATENBLATT (EU 2015/1186)** **ES – FICHA DE PRODUCTO (UE 2015/1186)**	IT – MARCHIO EN – BRAND FR – MARQUE NL – MERK DE – MARKE ES – MARCA	**THERMOROSSI S.P.A.**
IT – MODELLO EN – MODEL FR – MODÈLE NL – MODEL DE – MODELL ES – MODELO		**PIDRA 18**
IT – CLASSE DI EFFICIENZA ENERGETICA EN – ENERGY EFFICIENCY CLASS FR – CLASSE D'EFFICACITÉ ÉNERGÉTIQUE NL – ENERGIE EFFICIENTIEKLASSE DE – ENERGIEEFFIZIENZKLASSE ES – CLASE DE EFICIENCIA ENERGÉTICA		**A +**
IT – POTENZA TERMICA DIRETTA EN – DIRECT HEAT OUTPUT FR – PUISSANCE THERMIQUE DIRECTE NL – DIREKTE WARMTEAFGIFTE DE – DIREKTE WÄRMELEISTUNG ES – POTENCIA CALORÍFICA DIRECTA		**4,0 kW**
IT – POTENZA TERMICA INDIRETTA EN – INDIRECT HEAT OUTPUT FR – PUISSANCE THERMIQUE INDIRECTE NL – INDIRECTE WARMTEAFGIFTE DE – INDIREKTE WÄRMELEISTUNG ES – POTENCIA CALORÍFICA INDIRECTA		**13,8 kW**
IT – INDICE DI EFFICIENZA ENERGETICA EN – ENERGY EFFICIENCY INDEX FR – INDICE D'EFFICACITÉ ÉNERGÉTIQUE NL – ENERGIE-EFFICIENTIE-INDEX DE – ENERGIEEFFIZIENZINDEX ES – ÍNDICE DE EFICIENCIA ENERGÉTICA		**129**
IT – EFFICIENZA UTILE ALLA POTENZA TERMICA NOMINALE EN – USEFUL ENERGY EFFICIENCY AT NOMINAL HEAT OUTPUT FR – RENDEMENT UTILE À LA PUISSANCE THERMIQUE NOMINALE NL – NUTTIG RENDEMENT BIJ NOMINAAL VERMOGEN DE – BRENNSTOFF-ENERGIEEFFIZIENZ BEI NENNWÄRMELEISTUNG ES – EFICIENCIA ENERGÉTICA ÚTIL A POTENCIA CALORÍFICA NOMINAL		**95,6 %**
IT – EFFICIENZA UTILE AL CARICO MINIMO EN – USEFUL ENERGY EFFICIENCY AT MINIMUM LOAD FR – RENDEMENT UTILE À LA CHARGE MINIMALE NL – NUTTIG RENDEMENT BIJ MINIMALE WARMTEAFGIFTE DE – BRENNSTOFF-ENERGIEEFFIZIENZ BEI MINDESTLAST ES – EFICIENCIA ENERGÉTICA ÚTIL A CARGA MINIMA		**96,7 %**
IT – RISPETTARE TUTTE LE ISTRUZIONI RIPORTATE SUL MANUALE DI INSTALLAZIONE USO E MANUTENZIONE EN – ALWAYS FOLLOW THE INSTRUCTIONS PROVIDED IN THE OPERATING AND MAINTENANCE MANUAL FR – RESPECTER TOUTES LES INSTRUCTIONS CITÉES DANS LA NOTICE D'INSTALLATION, UTILISATION ET ENTRETIEN NL – VOLG ALTIJD DE INSTRUCTIES VAN DE INSTALLATIE-, GERUIKERSHANDLEIDING EN DE ONDERHOUDSVOORSCHRIFTEN DE – ERFÜLLEN DIE ANWEISUNGEN DER INSTALLATION, NUTZUNG UND WARTUNG, DIE IN DER ANLEITUNGSBUCH SIND ES – RESPECTAR LAS INSTRUCCIONES REPORTADAS EN EL MANUAL DE UTILIZACIÓN Y MANTENIMIENTO		

1 – INTRODUCTION

1.1 SAFETY GUIDELINES

This installation, use and maintenance manual is an integral and essential part of the product and must be kept by the user. Before commencing with the installation, use and maintenance of the product, carefully read this guide. All local, national and European regulations regarding the installation and use of the appliance must be met. The Manufacturer recommends carrying out all the maintenance operations described in this manual.
This appliance must only be used as intended by the manufacturer. Any other use is considered incorrect and therefore hazardous; consequently, the user shall be totally liable for the product if used improperly. Installation, maintenance and repairs must be carried out by professionally qualified personnel, certified according to Decree no. 37 of 22 January 2008 and in compliance with current regulations. In case of repairs only original spare parts supplied by the manufacturer must be used. Incorrect installation or poor maintenance can injure or damage people, animals or things; in this case the manufacturer shall be relieved of all responsibility.
Before beginning any cleaning or maintenance operation switch off the appliance by means of the 0/I main switch and disconnect the plug from the electrical power socket. The product must be installed in locations suitable for fire-fighting and furnished with all the services (power and outlets) which the appliance requires for a correct and safe operation. Any repairs or actions carried out on any systems, components or internal parts of the appliance, or on any of the accessories supplied with it, that are not specifically authorised by Thermorossi S.p.A, will automatically void the warranty and the manufacturer's responsibility, pursuant to Italian Decree no. 224 of the President of the Republic of 24/05/1988, art. 6/b.
It is recommended to keep this manual in a safe place that is easily accessible to all users; if the manual is lost or deteriorated contact the manufacturer for a replacement copy. If the appliance is sold or transferred to another user ensure that the manual is handed over with it. The images and figures featured in this manual are purely illustrative and may differ from the actual product. Furthermore, Thermorossi reserves the right to apply changes to the content of this manual anytime and without notice.

Thermorossi S.p.A. retains copyright on this manual. These instructions may not be reproduced or communicated to third parties or used in any other way without the necessary authorisation.

1.2 SAFETY STANDARDS

PERSONAL INJURY
This safety symbol identifies important messages throughout the manual. Read the information marked by this symbol carefully as non-observance of this message can cause serious injury to persons using the appliance.

DAMAGE TO PROPERTY
This safety symbol identifies messages or instructions that are fundamental for the generator to function well. To avoid serious damage to the appliance adhere strictly to these instructions.

INFORMATION
This symbol indicates important instructions for good functioning of the generator. If this information is not correctly observed, the performance of the appliance will not be satisfactory.

1.3 RECOMMENDATIONS

Before using the appliance, carefully read every section of this installation, use and maintenance guide as knowledge of the information and the regulations contained in it are essential for a correct use of the appliance.
The entire operation concerning the connection of the electric panel must be carried out by expert personnel; no responsibility will be accepted for damages, even to third parties, if the instructions for installation, use and maintenance of the appliance are not followed scrupulously. Modifications made to the appliance by the user or on his behalf, must be considered to be under his complete responsibility. The user is responsible for all the operations required for the maintenance of the appliance before and during its use.

1.4 GENERAL GUIDELINES

Attention: the appliance must be connected to a system provided with a PE conductor (in compliance with the specifications concerning low voltage equipment). Before installing the appliance check the efficiency of the earth circuit of the power supply system.

Attention: the power supply line must have a section which is suitable for the power of the equipment. The cable section must in any case be no less than 1.5 mm². The appliance requires powering with a voltage of 230V and 50 Hz. Voltage variations greater than 10% of the nominal value can cause irregular operation or damage the electrical device. Position the appliance so that the electric power outlet in the room is easily accessible. Ensure that a suitable differential switch is installed upstream from the equipment.
Position the power supply cable in order to prevent any contact of the latter with the smoke exhaust pipe or hot parts of the appliance. If the power cord is damaged it must be replaced by the manufacturer or by an authorised technical assistance service in order to avoid risks.
Your appliance has obtained the CE marking and has been made to run for 1 hour to check that it functions correctly.
The product must not be used by children under the age of 8 years, by persons with physical, mental or sensorial impairments, or by persons who are not familiar with the instructions for use and maintenance of the product (the instructions are found in this booklet). Children must not play with the appliance.

ATTENTION: before every use make sure that the burner and the ash pan are clean, and check that the firebox door is firmly closed and air tight.

ATTENTION: the door must always remain shut tight when the appliance is operating. It is strictly forbidden to open the door while the appliance is in operation. During operation, the smoke exhaust pipes, door, handles and some parts of the appliance may reach extremely high temperatures: be careful not to touch them and also educate children to be aware of said risks. Do not expose your body to hot air for long, do not overheat the room in which the appliance is installed, as these actions could cause health problems. Do not expose plants or animals directly to the hot air flow as this could have noxious effects on them. It is strictly prohibited to use any type of fuel (liquid, solid...) to light up the appliance: lighting must occur automatically as intended and described in this installation, use and maintenance booklet; consequently, it is also strictly forbidden to feed pellets (or any other material) into the brazier. Do not place non-heat resistant or inflammable or combustible objects in the vicinity of the appliance: keep them at a suitable distance. Do not place wet clothing to dry on the appliance. When using a clothes horse, keep at a suitable distance. It is strictly prohibited to disconnect the appliance from the electrical power mains while it is in operation.

Caution: do not wet the appliance and do not touch the electrical parts with wet hands. Never vacuum hot ash: this could damage the vacuum device. All the cleaning operations described in this manual must be carried out when the appliance is cold and shut off.

Attention! Warning for Swiss users
Refer to the local cantonal regulations imposed by the Fire Department (Mandatory signalling and safety distances) and the Note concerning installation of heaters issued by the Association of Cantonal Fire Agencies (VKF - AEAI).

ATTENTION: it is mandatory to earth the appliance. If this instruction is not observed serious damage, which is not covered by warranty, will result to the body of the appliance. Have an electrician check the earthing. There must be no electric potential (Volt) between the earth of the generator and the actual earth of the systerm.

1.5 TRANSPORTATION AND STORAGE

TRANSPORTATION AND HANDLING
The appliance body must always be in a vertical position when handled and exclusively by means of trolleys. Take special care to protect the electric panel and all the fragile parts from mechanical impact which could damage them and their correct functioning.

STORAGE
The appliance must be stored in a humid-free environment and sheltered from the weather; avoid placing the appliance directly on the ground. The Company denies all responsibility for damage caused to wood floors or floors made from any other material.
It is inadvisable to store the product for long periods of time.

1.6 GUIDELINES FOR CORRECT DISPOSAL OF THE PRODUCT

At the end of the product's useful life it must be disposed of in compliance with applicable regulations and in respect of the environment, not with urban waste. The product must be consigned to designated sorted waste collection centres for the disposal of electronic waste authorised by the local municipal councils. Correct disposal not only helps safeguard the environment but it also promotes recovery and recycling of the materials.

2 – TECHNICAL CHARACTERISTICS

PIDRA 18	**M.U.**	**VALUES**
Empty weight	Kg	155
Firebox power Min. / Max.*	kW	5.40 / 18.60
Rated power Min. / Max.*	kW	5.30 / 17.80
Output to water Min. / Max.*	kW	3.60 / 13.80
Output to the room Min. / Max.*	kW	1.60 / 4.00
Pellet consumption Min. / Max. *	Kg/h	1.10 / 3.77
Tank capacity *	Kg	22
Ø smoke exhaust pipe	mm	100
Min. draught at rated power	Pa	12
Min. draught at reduced power	Pa	12
Water content	l	18
Minimum working pressure	bar	1.0
Maximum working pressure	bar	2.5
Average smoke temperature at rated power *	°C	99
Average smoke temperature at reduced power *	°C	59
Max delivery water temperature	°C	80
Min water return temperature	°C	55
Smoke flow at rated power *	g/sec	8.90
Smoke flow at reduced power *	g/sec	4.10
Efficiency at rated power *	%	95.60
Efficiency at reduced power *	%	96.70
CO at 13% of 0_2 in the flue gases at rated power *	mg/m^3	52.0
CO at 13% of 0_2 in the flue gases at reduced power *	mg/m^3	215.0
Power supply voltage and frequency	V – Hz	230 – 50
Electrical consumption at rated power ***	W	50
Electrical consumption at reduced power ***	W	35
Electrical consumption in standby	W	3
Loss of load - water side at 10K	mbar	128
Loss of load - water side at 20K	mbar	32
Heatable volume **	m^3	480

*** All the data are based on the appliance fuelled with EN 14961-2 standard type-approved pellets.**

**** Important: take into consideration the fact that the heatable volume is greatly influenced by the insulation of the house, i.e. the energy class of the building and by the position of the appliance in the planimetry of the house. The indicated values, therefore, can vary considerably.**

***** The value does not take into account the electricity consumption of the circulating pump, as it depends on the pressure loss in the plumbing system.**

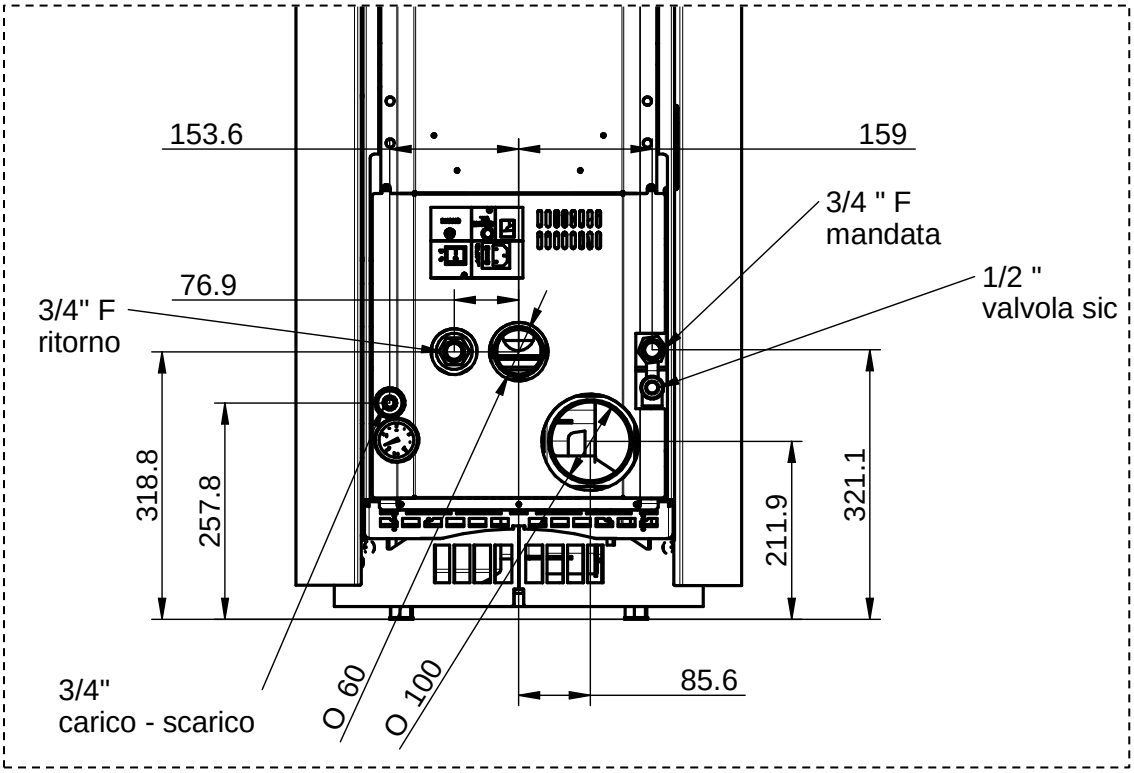

Legenda	**Key**
3/4" F mandata	3/4" F delivery
3/4" F ritorno	3/4" F return
3/4" carico - scarico	3/4" inlet - outlet
1/2" valvola sic.	1/2" safety valve

3 – GENERAL DESCRIPTION

3.1 OPERATING TECHNOLOGY

Your appliance has been built to fully satisfy all your heating and practical requirements. Top-grade components and functions managed with microprocessor technology guarantee high reliability and optimal performance.

3.2 THE PELLET

The appliance is fuelled by pellets, that is, cylinders of compressed sawdust; it his allows you to fully enjoy the heat of the flame without having to manually stoke the combustion.
The pellets have a 6 mm diameter and a length between 10 and 20 mm. They have a max moisture content of 8%; a thermal value of 4000/4500 Kcal/kg and density of 630-640 kg/m³. It must be approved according to UNI EN 14961-2 A1 A2.

It is strictly forbidden to use any pellet type other than that specified above. The use of fuel that does not comply with the above specifications not only immediately invalidates the warranty for the appliance but can also create dangerous situations. Do not use the appliance as an incinerator, at the risk of voiding the warranty.

3.3 PELLET REFUELLING

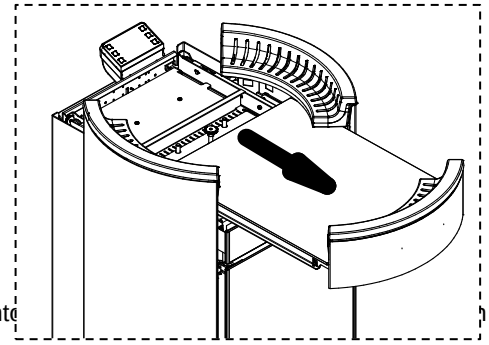

The feedbox is situated in the top part of the appliance. The load capacity specified in the technical data can vary according to the specific weight of the pellets.
Take special care when loading the tank as the screw feeder at its base is in motion. Take care when topping up with fuel as the loading area can get very hot.
ATTENTION: it is normal to find some pellets remaining in the tank even if the stove shuts off because the pellets have run out.

Attention: when filling up the tank, take care not to drop any pellets into
extreme cases, this could generate live flames.
The manufacturer recommends emptying the tank and vacuuming the screw feeder zone once a month and during the summer period. If the screw feeder can be seen when loading the pellet in the tank (pellet almost exhausted in the tank), the appliance must be turned off, cooled down and the brazier must be cleaned. Do not switch off the appliance by means of the main switch O/I on the power panel or by cutting off the power supply. Then restart the appliance.

Should you notice an excessive stagnation of flue gas in the combustion chamber, move away from the appliance immediately. In particular move away from the glass door of the combustion chamber. The excessive concentration of unburned gases could create an explosion that could break the glass. Do not open the fuel feed door for any reason and do not go near the appliance until said gases have been exhausted. Contact a technical service centre to determine the causes. Do not switch off the appliance by means of the main switch O/I on the power panel or by cutting off the power supply. Do not turn on the appliance for any reason whatsoever following an event such as this.

Only pellets complying with the above specifications are to be loaded into the tank; in no case whatsoever must foreign substances or objects be introduced into the tank, the brazier or any part of the generator.

3.4 MAIN COMPONENTS

A Pellet Power Motor
B Circulating pump
C Smoke suction unit
D Smoke exhaust pipe
E Combustion air intake
F Safety pressure switch
G Manual reset button
H Pellet loading motor
I Tank pellet
J Main switch 0/I
K Plant water delivery
L Electronic board
N Lighting heater
O Temperature sensor and reset thermostat bulb
P Automatic relief valve
R Control panel
S Spiral tube scraper lever
T Power board
U Combustion chamber / Patented burner
V Handle
W ¾" boiler drain/refill tap
X Plant water return
Y Safety valve 3 bar 1/2"
AC 2 l closed expansion tank for generator protection
AD Smoke thermocouple

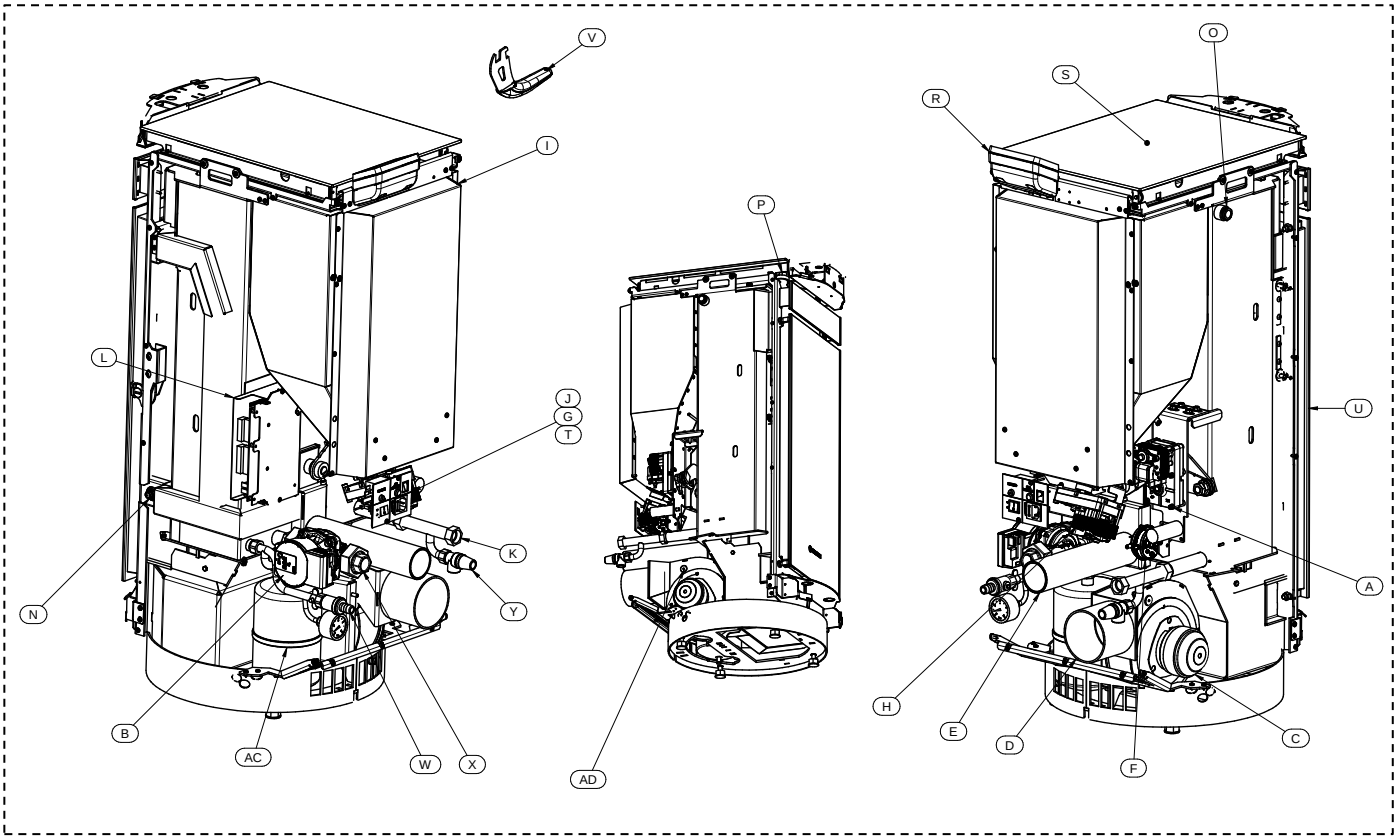

4 – INSTALLATION

4.1 APPLIANCE LOCATION

Follow the general guidelines set out in paragraph 1.1 to the letter. Above all keep in mind that the flooring of the room in which the stove is being installed must withstand the weight of the stove with the added weight of the pellet load and the water contained in it. The installer must provide the final user with verbal instructions on the correct use of the appliance when the appliance is set at work for the first time.

ATTENTION: The room where the appliance is installed must be well-ventilated and free from humidity and salty air. A high level of humidity or saltiness in the room can lead to the onset of rust or corrosion which will not be covered by warranty.

If inflammable materials are located in the vicinity of the appliance (e.g.: matchboarding, furniture, curtains, pictures and paintings, sofas) it is mandatory to comply with the minimum distances illustrated (see figure at right) Installation in the vicinity of heat-sensitive materials is only permitted if suitable insulating and fireproof protection is placed between the object and the appliance (ref. Uni 10683). If the flooring is made of wood or any other combustible material, it is mandatory to install a fireproof floor protector plate between the appliance and the floor. Installation in the vicinity of heat-sensitive materials is only permitted if suitable insulating and fireproof protection is placed between the object and the appliance (ref. Uni 10683). Failure to observe this instruction will immediately invalidate the warranty.

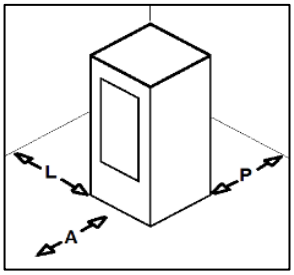

A = 800 mm
L = 200 mm
P = 200 mm

The installer must issue a certificate of conformity for the installation which includes the design plans and the following documents:

a) Report containing the type of materials utilised.
b) Project as defined in Article 5 of Ministerial Decree n° 37 22 January 2008.
d) References to existing partial or previous declarations of conformity (e.g. electrical wiring).
e) Copy of the certificate of recognition of the professional technical qualifications.

These documents must, by law, be kept together with the use and maintenance booklet. The customer is responsible for verifying, directly or indirectly, that the installation has been carried out to perfection in accordance with relevant regulations in force. Do not install the appliance in unsuitable rooms such as bedrooms, bathrooms, garages and/or lock-ups. It is forbidden to place the appliance in environments with an explosive atmosphere.

ATTENTION, the appliance is not simply a household appliance: if the instructions set out in this booklet are not followed and/or if installation of the appliance is not executed perfectly and/or the provisions in force are not strictly complied with, dangerous conditions could arise for both objects and persons. It is the user's responsibility to verify the presence, in the room, of a vent necessary for supplying oxygen to the generator.

4.2 UNPACKING THE APPLIANCE

The appliance is supplied packaged on a pallet; before positioning and installing it dismantle the appliance from the pallet as described.

1) Remove the protective cardboard.
2) Undo the four screws (B) and remove the lower ceramic support (A).
3) Remove the 4 screws (C).
4) Reassemble the support (A) using the screws (B) removed previously.
5) Now carefully remove the generator from the pallet making sure you do not damage it.

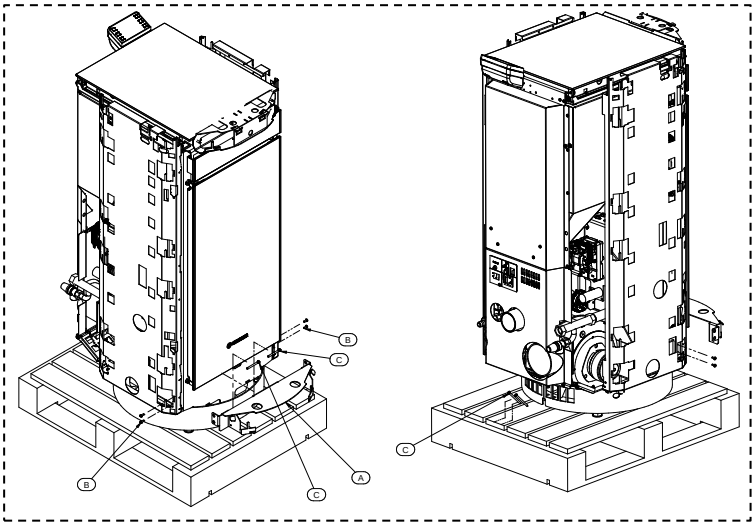

4.3 UNPACKING/MOUNTING THE CASING

See the specific manual for the casing.

4.4 CONNECTION TO THE FLUE OUTLET

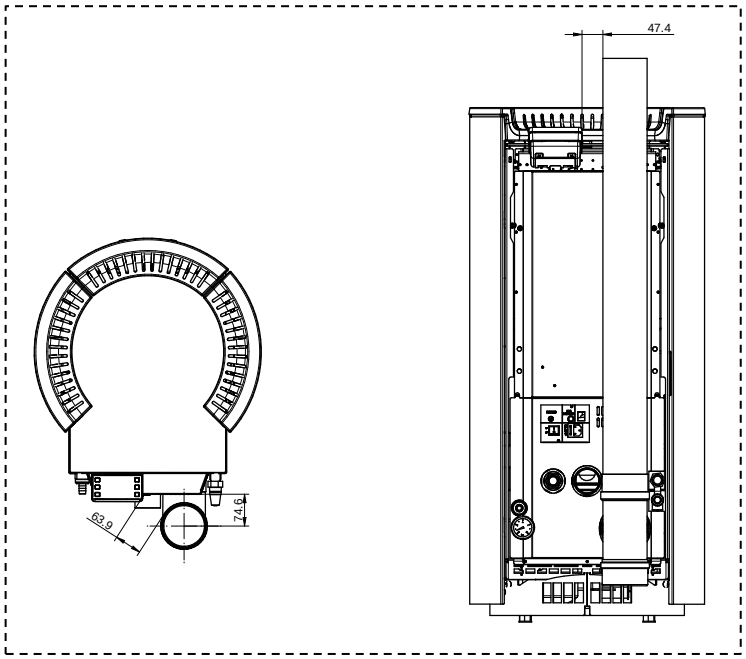

Connection of the appliance to the flue outlet must be carried out in strict compliance with the instructions contained in this booklet and particularly with those in the dedicated chapter.
Pay particular attention when assembling the smoke outlet pipe as it must be kept at a distance from the control panel, no less than the distance shown in the picture.
If the pipe is positioned close to the panel it would certainly damage the control panel (damage which is not covered by warranty).

4.5 HANDLE

Your appliance is supplied with a handle for opening and closing the firebox door to facilitate cleaning (see dedicated paragraph). When not in use, the handle can be stowed on the rear of the appliance.

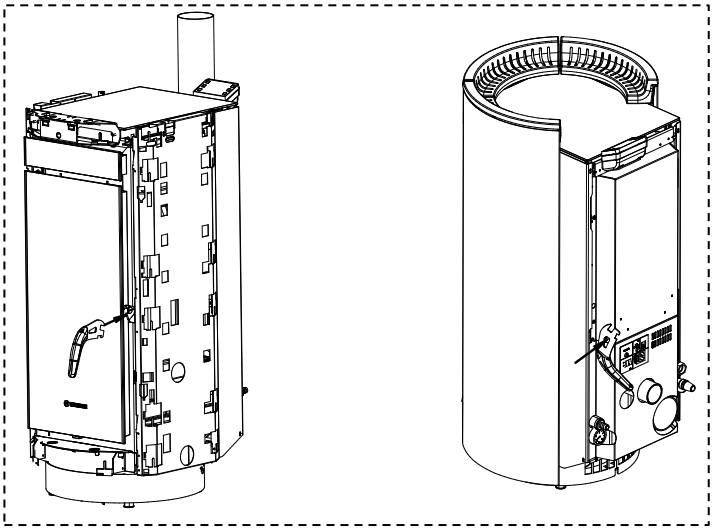

4.6 DRAWING COMBUSTION AIR FROM OUTSIDE

The appliance is fitted with an intake to enable drawing in the combustion air directly from outside the building. Connect the air intake on the appliance to the exterior of the building with suitable piping, capable of resisting high temperatures. The pipe's length must be maximum 600 mm.

ATTENTION: The suction duct must be protected with a grid and never be clogged. The protection grid, if installed, must be inspected and cleaned on a monthly basis. Moreover, a suitable windbreak fitting must be installed in the duct's terminal.

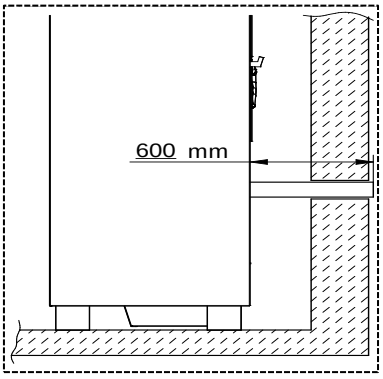

5 – HYDRAULIC CONNECTION

5.1 GENERATOR PLUMBING COMPONENTS

Legenda	Key
DETTAGLIO A	DETAIL A

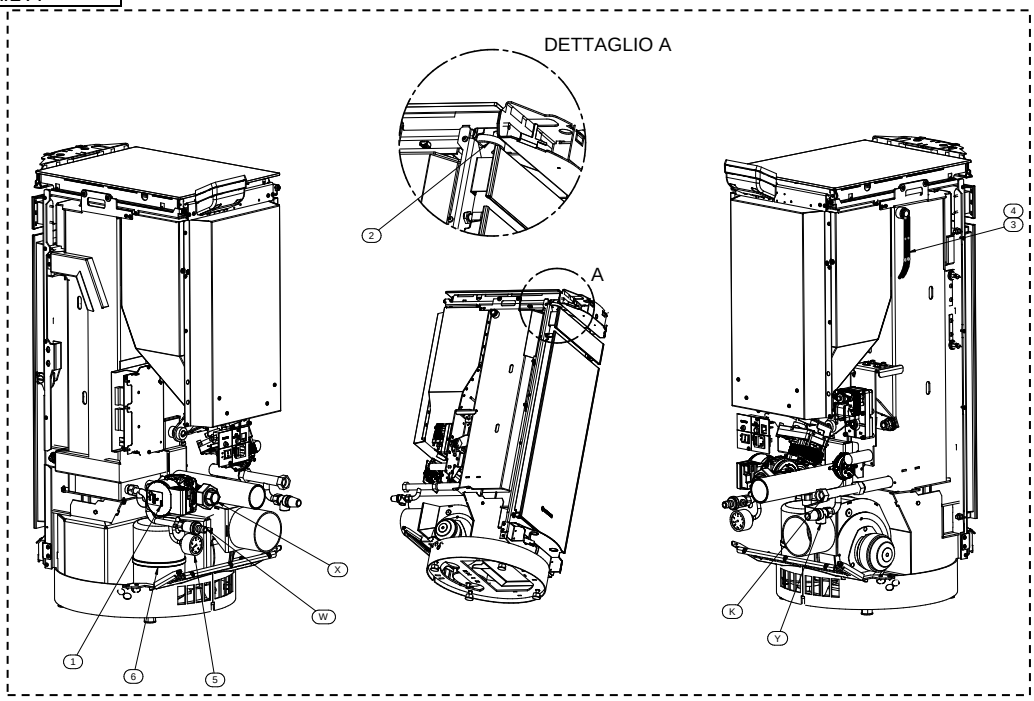

1	**System circulating pump**	**6**	**2 l closed expansion tank**
2	**Automatic relief valve**	**K**	**Plant delivery**
3	**Boiler water temperature sensor**	**W**	**System drain/refill gate valve**
4	**Reset thermostat bulb**	**X**	**Plant return**
5	**Pressure gauge 0 - 4 bar**	**Y**	**Safety valve 3 bar**

The circulating pump installed in the appliance has the following features:

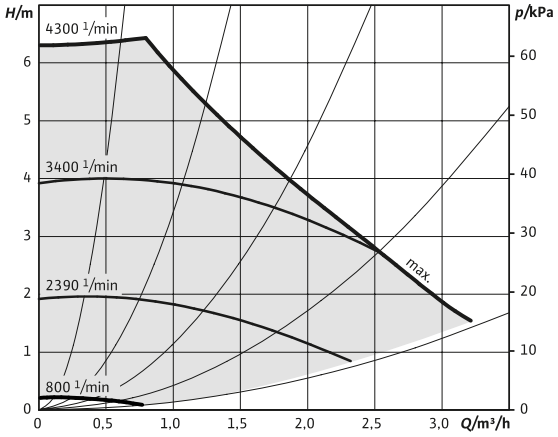

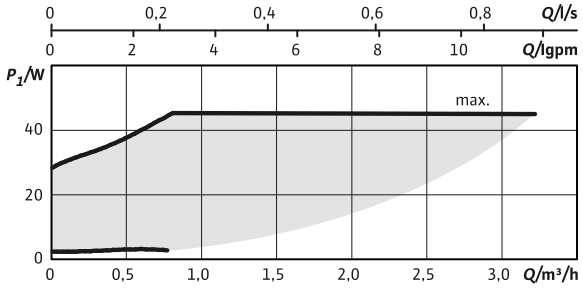

ATTENTION: FOR THE DELIVERY, RETURN, MAKE-UP AND DISCHARGE CONNECTIONS USE FLEXIBLE TUBES HAVING A LENGTH OF AT LEAST 70 CM TO FACILITATE MOVING THE APPLIANCE FOR MAINTENANCE.

ATTENTION: A CONNECTION MUST BE MADE BETWEEN THE SAFETY VALVE AND THE OUTLET TO PREVENT DAMAGING MATERIALS SURROUNDING THE APPLIANCE WHEN THE VALVE IS ACTIVATED.

ATTENTION: To avoid continual startups and shut offs, the size of the plant must be such as to guarantee power absorption that is not less than the power generated by the generator running at minimum steady state power level.

5.2 GUIDELINES FOR PLANTS WITH ZONE VALVES

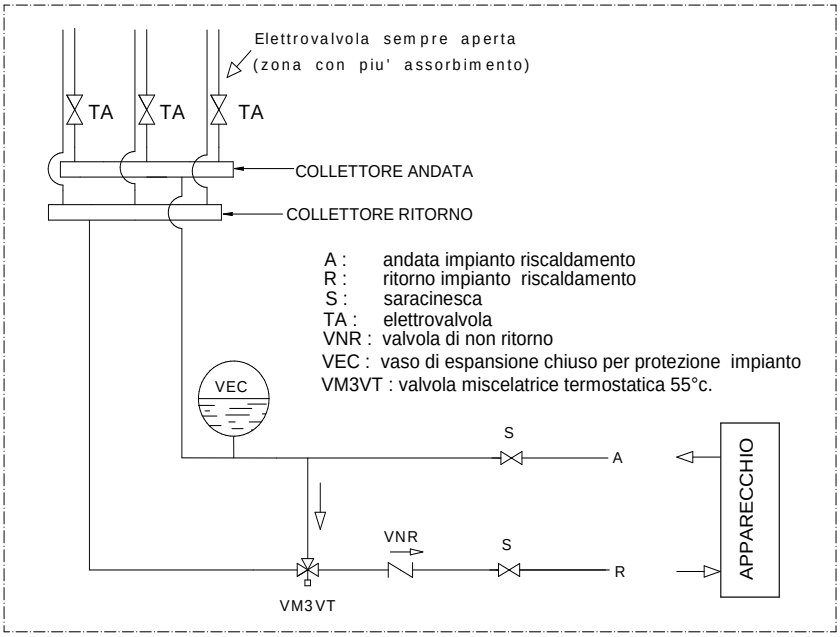

Note: above 61°C, the generator pump is always active as it is essential to dissipate the heat; therefore the solenoid valve must be open for the following reasons:
• to prevent the generator from continually starting up and shutting off caused by the inevitable loss of heat to the header and/or due to system tubing.
• to prevent the generator from raising the water temperature by just a few degrees each time it is switched off then back on until it shuts down due to exceeding the maximum threshold temperature.
To adjust the ambient temperature in which the valve opened, we recommend connecting the room temperature thermostat to the MODEM terminal (see dedicated paragraph) that allows the machine to be shut off via an external contact and therefore also restarted.
This ensures that the generator only activates if there is a real request for heat from the zone in which the chronothermostat is installed.
Several parallel-connected room temperature thermostats can be installed in the MODEM. This will ensure that the zone requesting heat (contact closed) automatically activates the generator.
In the event of frequent startups and shut offs due to the heat produced by the generator not being absorbed, the manual reset safety thermostat trips and blocks the generator.

N.B. Use chronothermostats having at least 2°C hysterisis.

Legenda	**Key**
Elettrovalvola sempre aperta (zona con più assorbimento)	Solenoid valve always open (zone with the most absorption)
COLLETTORE ANDATA	DELIVERY HEADER
COLLETTORE RITORNO	RETURN HEADER
A: andata impianto riscaldamento	A: heating system delivery
R: ritorno impianto riscaldamento	R: heating system return
S: saracinesca	S: gate valve
TA: elettrovalvola	TA: solenoid valve
VNR: valvola di non ritorno	VNR: nonreturn valve
VEC: vaso di espansione chiuso per protezione impianto	VEC: closed expansion tank for system protection
VM3VT: valvola miscelatrice termostatca 55°C	VM3VT: thermostatic mixing valve 55°C
APPARECCHIO	APPLIANCE

5.3 HYDRAULIC DIAGRAM WITH HEATING ONLY

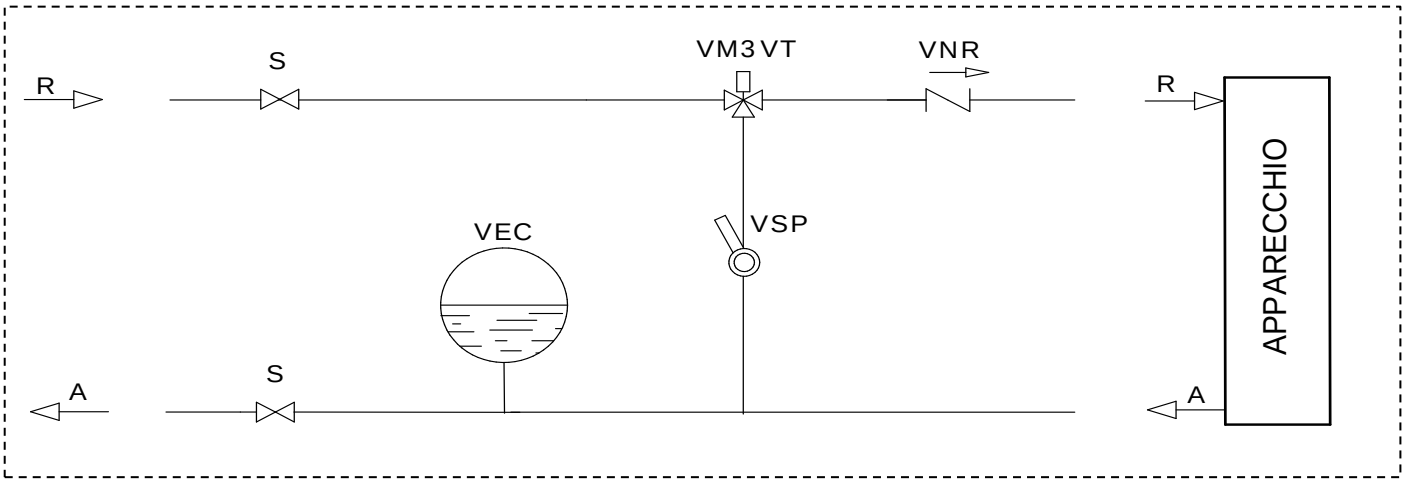

A	**Heating plant delivery**	**VM3VT**	**Mixing valve set at 55°C**
R	**Heating plant return**	**VSP**	**Gate valve to throttle the flow**
S	**Gate valve**	**VNR**	**Nonreturn valve**
VEC	**Closed expansion tank as protection for the system**		

Legenda	**Key**
APPARECCHIO	APPLIANCE

ATTENTION: it is mandatory to earth the generator. If this instruction is not observed serious damage, which is not covered by warranty, will result to the body of the appliance. Have a skilled electrician check the earthing. There must be no electric potential (Volt) between the generator earth and the system's real earth (earth plate). To prevent electrochemical corrosion of the appliance body do not use galvanised pipes and fittings. Other materials must be earthed with special earthing cables in order to obtain a unipotential earthing system.

5.4 EXAMPLE OF HYDRAULIC DIAGRAM WITH INTERSPACED BOILER COILS OR BOILER COILS

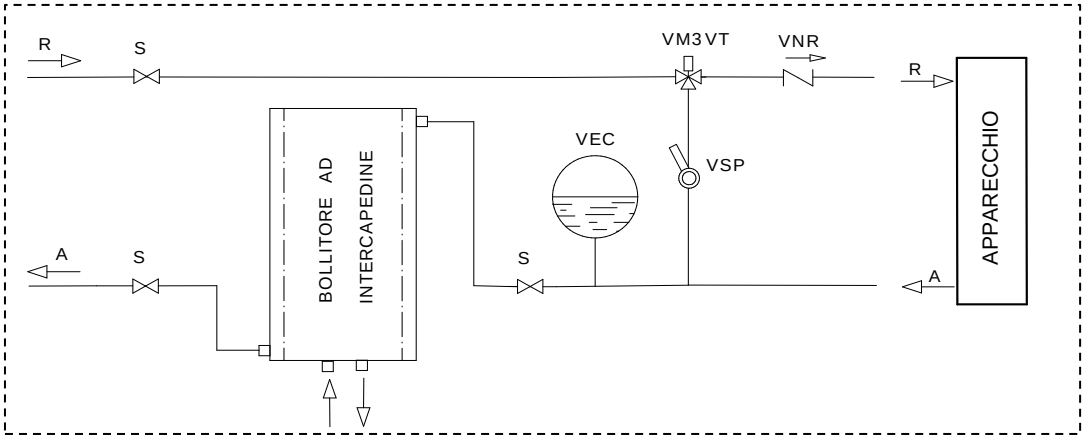

A	**Heating plant delivery**	**VM3VT**	**Mixing valve set at 55°C**
R	**Heating plant return**	**VSP**	**Gate valve to throttle the flow**
S	**Gate valve**	**VNR**	**Nonreturn valve**
VEC	**Closed expansion tank as protection for the system**		

Legenda	**Key**
BOLLITORE AD INTERCAPEDINE	AIR-CASED BOILER
APPARECCHIO	APPLIANCE

ATTENTION: The water temperature in the boiler tubes in this case is not adjustable and depends on the system's delivery temperature, that is the temperature set in the generator. The boiler tubes can be installed on the water return circuit. It is recommended to install a water softener in the domestic water system in order to maintain the boiler at its peak efficiency.

ATTENTION: it is mandatory to earth the generator. If this instruction is not observed serious damage, which is not covered by warranty, will result to the body of the appliance. Have a skilled electrician check the earthing. There must be no electric potential (Volt) between the generator earth and the plant's real earth (earth plate). To prevent electrochemical corrosion of the appliance body do not use galvanised pipes and fittings. Other materials must be earthed with special earthing cables in order to obtain a unipotential earthing system.

5.5 EXAMPLE OF HYDRAULIC DRAWING WITH BOILER COILS AND SYSTEM

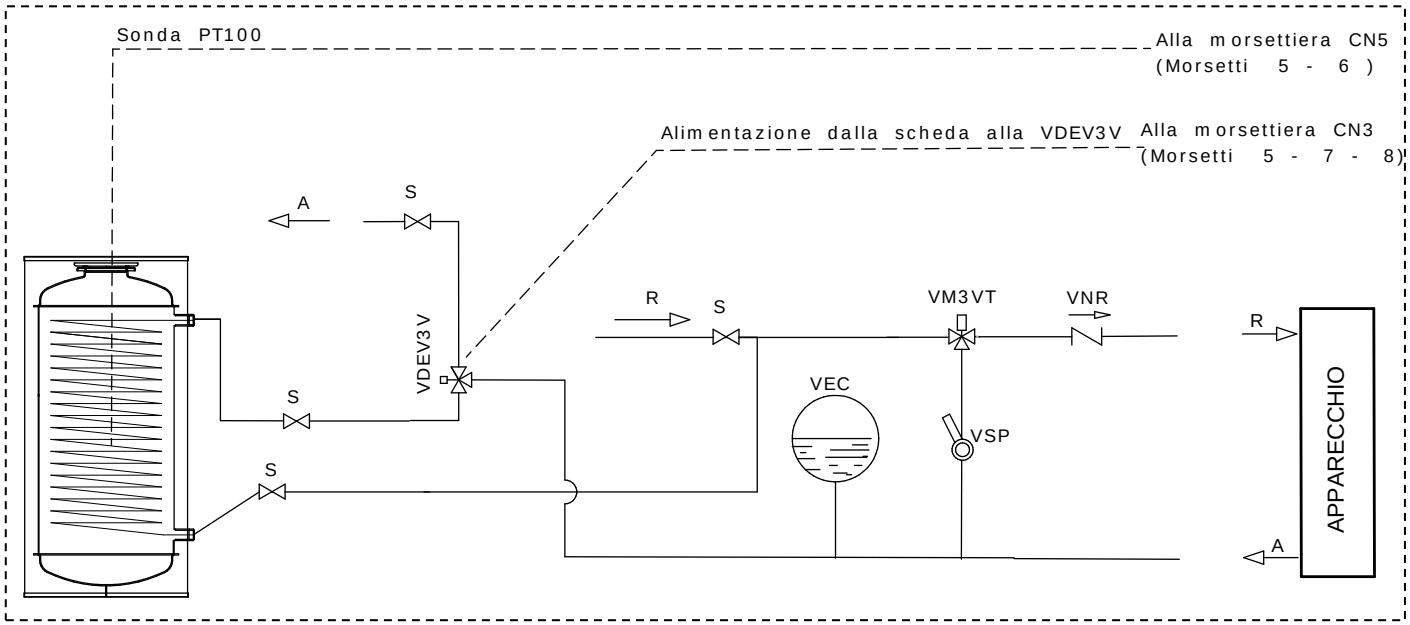

A	**Heating plant delivery**	**VM3VT**	**Mixing valve set at 55°C**
R	**Heating plant return**	**VSP**	**Gate valve to throttle the flow**
S	**Gate valve**	**VNR**	**Nonreturn valve**
VEC	**Closed expansion tank as protection for the system**	**VDEV3V**	**Three-way diverting valve**

Legenda	**Key**
Sonda PT100	Sensor PT100
Alimentazione dalla scheda alla VDEV3V	Power supply from the board to the VDEV3V
Alla morsettiera CN5 (Morsetti 5 - 6)	To the terminal block CN5 (Terminals 5 - 6)
Alla morsettiera CN3 (Morsetti 5 -7-8)	To the terminal block CN3 (Terminals 5 - 7 - 8)
APPARECCHIO	APPLIANCE

In order to guarantee correct absorption of the heat produced by the generator it is advisable to use a boiler tube with volume and heat exchange capacity suitable for the power of the generator. The boiler tube must have a minimum capacity of 300l. In any case the boiler tube must be capable of absorbing all the power that the generator is capable of delivering.
If this rule is not observed, the generator could raise the water temperature to such a point as to activate the safety limit thermostat which stops the fuel from dropping into the burner and therefore forces the appliance to shut off.
The installer must install a three-way motorized valve towards the system, powered by the appliance's power unit. The power unit trips if the domestic hot water sensor (SACS) drops below the minimum preset temperature, by supplying power to pin 8 of the terminal block CN3, whereas when the SAVS sensor reaches the maximum preset temperature it supplies power to pin 7. Consequently, the system must be designed in such a way that the hot water produced by the generator can reach the various rooms by acting on the zone valves.

ATTENTION: it is mandatory to earth the generator. If this instruction is not observed serious damage, which is not covered by warranty, will result to the body of the appliance. Have a skilled electrician check the earthing. There must be no electric potential (Volt) between the generator earth and the plant's real earth (earth plate). To prevent electrochemical corrosion of the appliance body do not use galvanised pipes and fittings. Other materials must be earthed with special earthing cables in order to obtain a unipotential earthing system.

5.6 HYDRAULIC DIAGRAM WITH THERMOCELL + THERMOPUFFER + HEATING

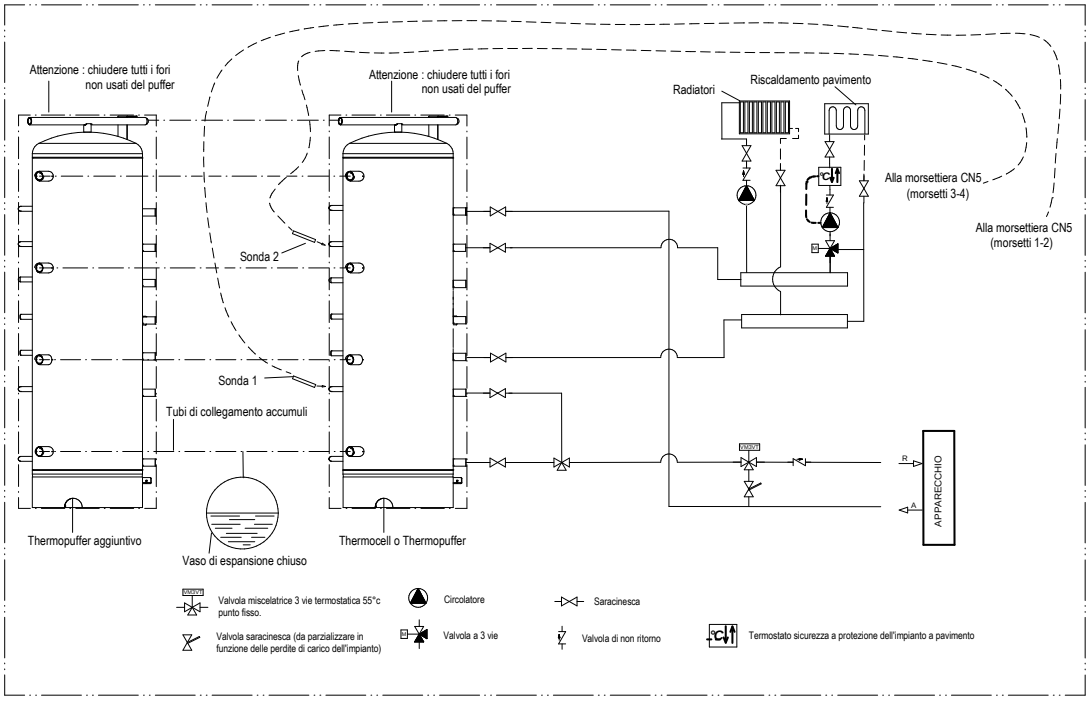

Legenda	**Key**
Attenzione: chiudere tutti i fori non usati del puffer	Note: close all the holes not used by the puffer
Radiatori	Radiators
Riscaldamento pavimento	Underfloor heating
Alla morsettiera CN5 (morsetti 3-4)	To the terminal block CN5 (Terminals 3-4)
Alla morsettiera CN5 (morsetti 1-2)	To the terminal block CN5 (Terminals 1-2)
Sonda 1	Sensor 1
Sonda 2	Sensor 2
Tubi di collegamento accumuli	Connection tubes to puffers
Thermopuffer aggiuntivo	Additional Thermopuffer
Vaso di espansione chiuso	Vaso di espansione chiuso
Thermocell o Thermopuffer	Thermocell or Thermopuffer
APPARECCHIO	APPLIANCE
Valvola miscelatrice 3 vie termostatica 55°C punto fisso	Three-way thermostatic mixing valve 55°C, fixed point
Valvola saracinesca (da parzializzare in funzione delle perdite di carico dell'impianto)	Gate valve (throttle according to pressure drop in the system)
Circolatore	Circulating pump
Valvola 3 vie	Three-way valve
Saracinesca	Gate valve
Valvola di non ritorno	Nonreturn valve
Termostato sicurezza a protezione dell'impianto a pavimento	Safety thermostat for protection of the under floor heating system

ATTENTION: the preload pressure of the expansion tank must be greater than the plant pressure: for an expansion tank preloaded to 2 bar the plant must be loaded to a pressure that does not exceed 1.5 bar.

ATTENTION: The Thermocell is only fitted with a connection to 230V - 50Hz power line; the settings of Sensor S1 and Sensor S2 must only be controlled by the appliance. Connect the two sensors PT 100 (optional code no. 60010695) to the terminals on the appliance's "Sensor S1" and "Sensor S2" board. Sensor S2 must always be positioned at the same height as the water delivery to the system.

ATTENTION: Sensor S1 must be set at a range of between 60°C and 65°C, sensor S2 must be set at a range of between 50°C and 55°C. These settings are only approximate as the optimal setting is carried out by the Service Centre on site during the initial testing of the appliance, following the assessment of the system's specific characteristics.

ATTENTION: it is mandatory to earth the generator. If this instruction is not observed serious damage, which is not covered by warranty, will result to the body of the appliance. Have a skilled electrician check the earthing. There must be no electric potential (Volt) between the generator earth and the plant's real earth (earth plate). To prevent electrochemical corrosion of the appliance body do not use galvanised pipes and fittings. Other materials must be earthed with special earthing cables in order to obtain a unipotential earthing system.

ATTENTION: Sensor S2 and sensor S1 must be connected to the dedicated clamps on the terminal block as indicated in the diagram. To view the readings of Sensors S1 and S2 on the display it is necessary to activate the THERMOCONTROL function.

5.7 INSTRUCTIONS FOR EXECUTING THE HYDRAULIC SYSTEM CLOSED EXPANSION TANK

To install the system with a closed expansion tank refer to the requirements laid down in EN 10412-2:2009 for appliances with nominal heat output not exceeding 35 kW or in the Ministerial Decree Collection R edition 2009 for appliances with nominal heat output exceeding 35kW. The hydraulic system must be installed by qualified personnel who are familiar with the standards mentioned above and who have the appropriate professional requirements to release the declaration of conformance in accordance with Ministerial Decree n° 37 of 22 January 2008.

The generator is already supplied with the following safety devices on board:
a) closed expansion tank for generator protection only*
b) ordinary safety valve 3 bar, not I.S.P.E.S.L. approved
c) an automatic reset temperature limiting device:
this is an automatic adjustment device that interrupts the fuel supply to the generator when the water reaches the temperature setting. The system starts up again automatically when the water temperature drops below the preset value
d) a manual reset temperature limiting safety device:
this is an automatic device that interrupts the fuel supply when the water reaches the maximum permissible temperature. The fuel infeed will only restart when the water temperature drops below a preset value and after the device has been reset manually
e) circulation system:
the appliance is fitted with a circulating pump connected to the return pipes which is controlled directly by the generator's control board.
***** An additional closed expansion tank must be series-connected to the generator as protection for the system.
The nominal volume of the additional closed expansion tank must be sized in relation to the volume of expansion of the water contained in the system. Thermorossi prescribes that the size of the additional closed expansion tank must be equal to 10% of the water contained in the system.

The previous chapter does not replace the above standards to which it makes reference. The qualified installer must in any case be fully aware of the above standards and their amending versions.

6 – USE OF THE APPLIANCE

The appliance, when operating, could be hot to the touch, particularly the door of the combustion chamber: take care when handling the appliance components. Your appliance has obtained the CE marking and has been made to run for at least one hour to check that it functions correctly. The product must not be used by children, by persons with physical or mental impairments, by persons who are not familiar with the instructions for use and maintenance of the product (the instructions are found in this use and maintenance booklet).

ATTENTION: before each use make sure that the burner is clean.

ATTENTION: the door must always remain shut tight when the appliance is operating. It is strictly forbidden to open the door while the appliance is in operation. While the appliance is in operation the smoke exhaust pipes can reach extremely high temperatures: do not touch them! It is strictly prohibited to use any type of fuel (liquid, solid...) other than pallet to light up the appliance: lighting must occur automatically as intended and described in this installation, use and maintenance booklet; consequently, it is also strictly forbidden to feed pellets (or any other material) into the brazier. Do not place non-heat resistant or inflammable or combustible objects in the vicinity of the appliance: keep them at a suitable distance. Do not place wet clothing to dry on the appliance. When using a clothes horse, keep at a suitable distance. It is strictly prohibited to disconnect the appliance from the electrical power mains during normal operation.

6.1 DESCRIPTION OF THE CONTROL PANEL

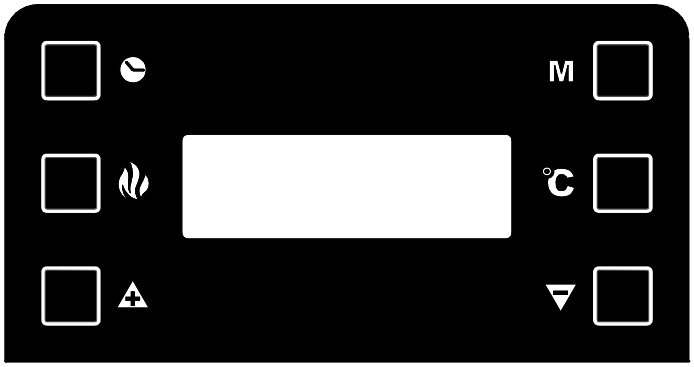

The control panel is managed by a microprocessor. The temperature detection system uses thermocouples. The display improves the appliance management by making read-outs and functions promptly available. The main feature of the panel is the all-automatic management of the appliance. The controls and the various displays are described below.

Flame button
Pressing this button when the appliance is off activates the **START** sequence, sets the operating power in the **WORK** mode or shuts off the appliance by activating the **OFF** sequence. (See dedicated paragraph).

Degrees Button
Press this button to set the target water temperature; the setting range is between 65 °C and 73 °C. This value is displayed on the left side of the display next to the thermometer symbol.
Attention: the target temperature is only considered if the appliance is in AUTO mode (see dedicated paragraph).

Scroll buttons (only in the Menu)
Press MINUS key to lower the value. Press PLUS key to raise the preset value.

Clock button
Press this button to activate / deactivate the programming. (See dedicated paragraph).

Menu button
Press this button to access the main menu. You can scroll the setting screens shown below, which will be described in detail in the following paragraphs. To access the functions of each subwindow wait a few seconds.

DATE/TIME	This button is used to set the day of the week, the hour and minutes. (See dedicated paragraph).
CHRONO	This button is used to set the programmed on and off sequences. (See dedicated paragraph).
LEVEL	Is used to change the rotation speed of the smoke suction unit. (See dedicated paragraph).
THERMOCONTROL	Enables you to activate or deactivate the control of a puffer (if installed). This screen only appears if the two optional sensors are connected to the appliance. (See dedicated paragraph).
ACS SUMMER	Enables you to activate or deactivate the dedicated control of a boiler (if installed) that produces domestic hot water (ACS), thereby cutting off the system. This screen only appears if the optional sensor is connected to the appliance. (See dedicated paragraph).
T.AMBIENT	Enables you to control the ON/OFF cycles of the appliance according to the desired room temperature. This screen only appears if the optional sensor is connected to the appliance (see dedicated paragraph).

THERMO ACS Enables you to activate control of a boiler (if installed) for domestic hot water (ACS) assigning absolute priority to the boiler requirements before replenishing the system.
This screen only appears if the optional sensor is connected to the appliance (see dedicated paragraph).

Display
The following information can appear on the display:

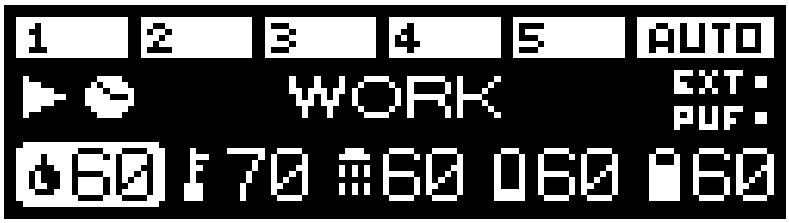

The appliance is in OFF phase

1° MANUAL OPERATING POWER

2° MANUAL OPERATING POWER

3° MANUAL OPERATING POWER

4° MANUAL OPERATING POWER

5° MANUAL OPERATING POWER

In this mode the user can choose to run the appliance from the minimum power (therefore with the minimum pellet consumption) to the maximum power (therefore with the maximum pellet consumption). In this case the appliance always runs at the set power without any modulation in accordance with the target temperature.

AUTOMATIC LEVEL

The appliance modulates the operating power automatically based on the target temperature set by the user. (See dedicated paragraph).

Indicates the temperature of the domestic hot water boiler, if the optional sensor is connected.

Indicates the temperature of Sensor S1 for control of a puffer, if the optional sensor is connected.

Indicates the temperature of Sensor S2 for control of a puffer, if the optional sensor is connected.

Indicates that the circulation pump is activated when the water temperature in the boiler exceeds 61°C.

Indicates the boiler water temperature detected by the thermocouple.

The thermometer icon, on the left of the display, indicates the target temperature for the water in the boiler, which can be adjusted by the user by means of the **Degrees Button.**

Indicates that the appliance has been switched on by the contact of an external chronothermostat.

Indicates that the appliance has been connected to a puffer which is requesting heat.

Indicates that the ON/OFF programming set through CHRONO has been enabled

Indicates the room temperature detected by the thermocouple, if connected.

The thermometer icon, on the right of the display, indicates the target room temperature set by the user if the optional sensor is connected

6.2 DESCRIPTION OF THE POWER PANEL

The components of the power board are described below:

1) Electrical power outlet 220V-240V 50Hz
2) Main switch 0/I.
3) Test light for pellet feed motor.
The light comes on simultaneously with the activation of the pellet feed motor.
4) Cap for reset thermostat button.
If the reset thermostat overheats stop the pellet feeder. The appliance must cool down before you can restart the appliance. After verifying and eliminating the causes of the event, undo the protective cap and press the button.
5) Protection fuse 3.15 A.
6) Outlet RJ 45 to connect Wi-Fi module.

Legenda	**Key**
RIARMO	RESET
SPIA MOTORIDUTTORE	GEARMOTOR INDICATOR

6.3 DATE/TIME: SETTING THE DATE AND TIME

The appliance must be energised and the I/0 switch in position "I".

The current date and time can be set using the DATE/TIME function.

To set the current time and date proceed as follows:

1) Press the **Menu Button** once to view the following screen:

2) After a few seconds the following screen will appear on the display:

3) Now press the **Scroll Buttons** to change the day of the week; each number corresponds to one day of the week (e.g. 1 corresponds to Monday, 2 corresponds to Tuesday, etc...). To confirm the selected day of the week press the **Degrees Button**. Once confirmed, the selector shifts to the hour section while the selected day of the week remains framed:

4) Press the **Scroll Buttons** to change the hour. Once you have set the hour confirm the value by pressing the **Degrees Button.** Once confirmed, the selector shifts to the minutes section. Press the **Scroll Buttons** to set the minutes. To confirm press the **Degrees Button**.
Once confirmed, the date and time setting screen closes automatically and the initial screen returns to the display.

If you confirm the wrong value simply press the **Menu Button** several times to exit the box until the initial screen will appear, and repeat the procedure described above.

6.4 CHRONO: ON/OFF PROGRAMMING

The appliance must be energised and the I/0 switch in position "I".

The CHRONO function allows you to set the weekly program by setting up to 3 on-off cycles at different times for every day from Monday through to Sunday.

To set a program follow the procedure described below:
1) Press the **Menu Button** twice quickly to view the following screen:

After a few seconds the following screen will appear on the display:

2) Press the **Scroll Buttons** to select the day of the week on which you want to set the program. Each number corresponds to one day of the week (e.g. 1 corresponds to Monday, 2 corresponds to Tuesday, etc...). To confirm the selected day of the week for the programming press the **Degrees Button**. The following screen will appear:

3) Now press the **Scroll Buttons** to select the hour at which you wish the appliance to start up automatically (ON1). Once the hour is set confirm the value by pressing the **Degrees Button.** When scrolling the ON1 values the OFF1 values will scroll as well; this is to avoid setting a shut off time that is earlier than the start up time.
Once confirmed, the selector shifts to the minute section of ON1. Press the **Scroll Buttons** to set the minutes for the first start up. Confirm by pressing the **Degrees Button**.

4) Now press the **Scroll Buttons** to select the hour at which you wish the appliance to shut off automatically (OFF1). Once the hour has been set, confirm the value by pressing the **Degrees Button.**
Once confirmed, the selector shifts to the minute section of OFF1. Press the **Scroll Buttons** to set the minutes for the first shut off. Confirm by pressing the **Degrees Button**.

At this point the first ON/OFF cycle for the selected day has been set.

The following screen will appear:

At this point if no further programming is required for that day go to point 5-A.
If, on the other hand, you wish to program a second ON/OFF cycle for that day go to point 5-B.

5-A) Press the **Menu Button** to exit the screen, in order to enable you to program the times for the ON/OFF cycles for the other days of the week. In this case repeat the instructions from point 2 up to this paragraph.

5-B) Press the **Scroll Buttons** to select the hour at which you wish the appliance to start up automatically for the second time (ON2). The start up time will be that set before OFF1; this is to avoid setting a second start up time that is earlier than the preceeding shut off time. Once the hour is set confirm the value by pressing the **Degrees Button.** When scrolling the ON2 values the OFF2 values will scroll as well; this is to avoid setting a shut off time that is earlier than the start up time.
Once confirmed, the selector shifts to the minute section of ON2. Press the **Scroll Buttons** to set the minutes for the second start up. Confirm by pressing the **Degrees Button**.
Now press the **Scroll Buttons** to select the hour at which you wish the appliance to shut off automatically (OFF2). Once the hour has been set, confirm the value by pressing the **Flame Button.**
Once confirmed, the selector shifts to the minute section of OFF2. Press the **Scroll Buttons** to set the minutes for the second shut off. Confirm by pressing the **Degrees Button**

At this point the second ON/OFF cycle for the selected day has been set.
The following screen will appear:

At this point if no further programming is required for that day go to point 6-A.
If, on the other hand, you wish to program a third ON/OFF cycle for that day go to point 6-B.

6-A) Press the **Menu Button** to exit the screen, in order to enable you to program the times for the ON/OFF cycles for the other days of the week. In this case repeat the instructions from point 2 up to this paragraph.

6-B) Press the **Scroll Buttons** to select the hour at which you wish the appliance to start up automatically for the third time (ON3). The start up time will be that set before OFF2; this is to avoid setting a third start up time that is earlier than the preceeding shut off time. Once you have set the hour confirm the value by pressing the **Degrees Button.** When scrolling the ON3 values the OFF3 values will scroll as well; this is to avoid setting a shut off time that is earlier than the start up time..

Once confirmed, the selector shifts to the minute section of ON3. Press the **Scroll Buttons** to set the minutes for the third start up. Confirm by pressing the **Degrees Button**.
Now press the **Scroll Buttons** to select the hour at which you wish the appliance to shut off automatically (OFF3). Once the hour has been set, confirm the value by pressing the **Degrees Button.**
Once confirmed, the selector shifts to the minute section of OFF3. Press the **Scroll Buttons** to set the minutes for the third shut off. Confirm by pressing the **Degrees Button.**

At this point the third and final ON/OFF cycle for the selected day has been set.
Alternatively, if you wish to copy the exact same programming for the ON/OFF cycles set for a particular day to the next day simply press the **Flame button**.

For example: if I want to copy all the programmed ON/OFF cycles set for Monday to Tuesday the following screen will appear:

Press the **Flame button** once again to copy all the cycles programmed for Tuesday to Wednesday. The following screen will appear:

Using the same logic we can copy the programmed cycles to the other days.

7) To conclude the programming operations simply press the **Menu Button** several times to exit the box until the initial screen will appear.

ATTENTION: The appliance ignores any ON or OFF command programmed with a value of 00:00. Consequently if you do not wish to use an ON or OFF time setting simply set a value of **00:00**. The appliance ignores any ON or OFF command if the shut off time is set the same as or before the start up time.

ATTENTION:
In the event of a programmed cycle on always ensure that the brazier is clean. Failure to clean the brazier can reduce and/or affect the life of the spark plug as it would be subjected to high temperatures due to poor cooling. It is recommended to set ON/OFF cycles times lasting no less than 2 hours, in order to save energy and for the proper operation of the appliance.

Enabling the programmed cycles:
Back in the initial screen, to enable the appliance to carry out the ON/OFF cycles as programmed it is necessary to press the **Clock Button**. The image of a clock will appear on the main screen:

The programmed cycles are now enabled.

When the programmed cycles are enabled (a clock symbol appears on the display) it will not be possible to use an additional chronothermostat. The appliance will strictly follow the programmed ON/OFF times. No request for heat by the system, a puffer or a domestic hot water boiler will be considered by the appliance if it is outside the programmed time interval.

Disabling the programmed cycles:
To disable the appliance from carrying out the programmed ON/OFF cycles press the **Clock Button** once again. On the display the clock symbol will disappear. This operation disables the weekly program that has been set by the user but does not delete or reset the times.

Resetting the programmed cycles:
Moreover, it is possible to reset, in other words delete, all the programmed cycles entered by the user by holding down the **Clock Button** in the initial screen for approx. five seconds. The words **CLEAR TIMERS** will appear momentarily on the screen.

Do not release the button until the text CLEARED appears on the screen. Only the appearance of the words CLEARED signal that the previously entered programmed cycles have been deleted. When the programmed cycles are active the operating level at start up, that is the combustion power, will be the same level set before the last time the machine was shut off: that is, only if it was a programmed shut off, not if the machine was shut off by means of a manual action. Manual shut down can only be carried out with the programming disabled. If after a manual shut off the programmed cycle re-enables, at the next programmed start up the appliance will be on the 1st combustion power level.

When is it important to use the CHRONO function?

In systems configured like the diagram on the right, where the appliance is connected directly to the system, without the use of external chronothermostats. In this case it is necessary to set the hour programs to prevent the appliance from being stressed by uncontrolled ON and OFF cycles. In addition we recommend using the generator in AUTO mode to activate the automatic modulation based on the target temperature setting.
If the dwelling is fitted with zone valves, with this type of installation, it is mandatory to deactivate the valves by opening them completely.
Consequently the dissipation of heat, at least equal to or greater than the quantity of heat generated by the appliance and transmitted to the water when running at the minimum power level must be guaranteed at all times.

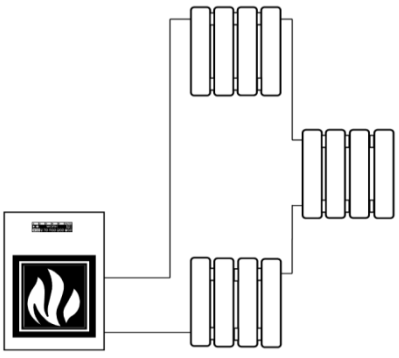

6.5 LEVEL: OPERATING LEVEL SETTING

The appliance must be energised and the I/0 switch in position "I".
Your appliance is delivered with an excellent program installed that favours combustion efficiency; the program is called **LEVEL 1**.

However, if you are using pellets with a higher than normal incidence of residues after combustion in the brazier, it is possible to select alternative levels:

LEVEL 2 is an operating program that accelerates the speed of the smoke suction unit in proportion to all the combustion power levels. This level must be set when the user notices a weak, high and very dark flame. Attention: this modification does not authorise the use of below-standard pellets, or no vacuum in the flue outlet.

If using loosely compressed pellets, you could select:

LEVEL 0: is an operating program that decelerates the speed of the smoke suction unit when using loosely compressed pellets and/or when the flue outlet has a very high vacuum, over 2 mm water column (20 Pascal).

The pellet consumption value remains unchanged regardless of the selected operating level. These variations will only change the rotation of the smoke suction unit in the WORK stage (see para. 6.10), all the other stages will not undergo any changes.

Select the required Level by acting as follows:

1) Press the **Menu Button** three times quickly and the following box will appear:

After a few seconds the following screen will appear on the display:

2) To change the operating level, hold down a **Scroll Button** while simultaneously pressing the other **Scroll Button.**

To set the desired level simply press the **Menu Button** several times until the initial screen will appear on the display.

The level selection can be made with the appliance **OFF** or **ON**. If the change is made while the appliance is running the difference in the flame will be apparent. It is mandatory to pay particular care when selecting the most appropriate operating cycle for your installation. After the selection of the operating cycle a thorough cleaning of the brazier is mandatory.

6.6 THERMOCONTROL: CONTROLLING A PUFFER

The appliance must be energised and the I/0 switch in position "I".

This function enables you to control the operating temperature of a stratification puffer through the use of two sensors PT 100 (optional) connected to the respective terminal block on the electronic board (see dedicated paragraph).

ATTENTION: If one or both optional sensors are not connected to the appliance or are interrupted, it will not be possible to view and therefore activate the THERMOCONTROL function.

When this function is activated the appliance automatically controls the ON/OFF cycles based on the activation temperatures set by the user.

The puffer must have an appropriate capacity. We recommend a capacity ranging between a minimum of 20 dm^3 to a maximum of 50 dm^3 for every kW of maximum power supplied to the water by the appliance.

The THERMOCONTROL function can be activated in the following way:

1) Quickly press the **Menu Button** until the following screen appears:

After a few seconds the following screen will appear on the display:

2) Press one of the two **Scroll Buttons** and the following screen will appear (Select ON to activate).

3) Confirm the selection by pressing the **Degrees Button** and the following screen will appear:

4) Press the **Scroll Buttons** to set the activation temperature for Sensor S2. Sensor S2 is installed in the top part of the puffer and it commands the appliance to start up as it is exhausting the available heat inside it. The setting range is between 40 °C and 65 °C.
5) Confirm the selection by pressing the **Degrees Button** and the following screen will appear.

6) Press the **Scroll Buttons** to set the activation temperature for Sensor S1. Sensor S1 is installed in the lower part of the puffer and it commands the appliance to shut off as the puffer is satisfied. The setting range is between 60 °C and 70 °C.
The settable temperature will in any case always exceed, by at least 4°C,the temperature setting for S2.
7) Confirm the selection by pressing the **Degrees Button** then press the **Menu Button**several times to exit the screen, until the initial screen appears.

At this point the appliance operating status will appear on the display.

To **disable** the THERMOCONTROL function simply repeat operations 1 and 2, but this time select the OFF command. The function will be disabled immediately.

ATTENTION: it is advisable to set the action temperature for sensors S1 and S2 as indicated in the hydraulic diagrams in this manual. Pay special attention to the number of ON/OFF cycles that the appliance is subjected to with this function. It is recommended not to exceed three ON/OFF cycles. If the startups are frequent and repeated it is possible that the the generator will fail to start and the following error message appear: "Failed start – Clean burner". The appearance of this message is not attributable to a product defect but is caused by a brazier that requires cleaning as described in this manual in chapter entitled: "Troubleshooting – Possible Causes – Solutions".

ATTENTION: By setting the THERMOCONTROL ON the appliance will only start up and shut off autonomously according to the temperature settings of sensors S1 and S2.

ATTENTION: If the programmed time schedule is enabled (a clock symbol appears on the display) the appliance will follow exclusively the preset ON and OFF times. No request for heat from the puffer will be considered by the appliance outside the programmed time interval and the texts WAIT TIME or NO PROGRAM will appear on the display (see dedicated paragraph).

ATTENTION: If an external chronothermostat is connected to the appliance, the appliance will follow it exclusively. No request for heat from the puffer will be considered by the appliance if the external chronothermostat does not give consent and the text WAIT TIME appears on the display (see para. 6.10).

By setting **THERMOCONTROL ON**, when the puffer is requesting heat the temperatures detected by the sensors S1 and S2 and the word PUF will appear on the display.

When is it important to use the THERMOCONTROL function?

In systems configured like the diagram on the right, where the appliance is connected directly to a stratification puffer.
When you use this function the generator starts up automatically when the puffer is running out of heat then switches off when it is satisfied. The use of a correctly-sized puffer also enables the production of low temperature heat, such as for example for under floor heating systems, which otherwise could not be controlled by a high temperature biomass appliance.

6.7 ACS SUMMER: ACTIVATION OF THE BOILER TUBE CONTROL FROM A CHRONO COMMAND

The appliance must be energised and the I/0 switch in position "I".

This function enables you to manage the operating temperature of a boiler tube for the production of domestic hot water (ACS) through the use of a sensor PT 100 (optional) connected to the terminal block on the electronic board.

ATTENTION: If the optional sensor is not connected to the appliance or is interrupted, it will not be possible to view and therefore activate this function.

When this function is activated the appliance automatically controls the ON/OFF cycles based on the set temperature of the boiler tube, and ignores requests for heat from the system and the puffer, if installed. This function is particularly useful in summer when only domestic hot water is required without having to supply the heating system.
When this function is activated the appliance operates only at automatic power.

The ACS SUMMER function can be activated in the following way:
1) Quickly press the **Menu Button** until the following screen appears:

After a few seconds the following screen will appear on the display:

2) Press one of the two **Scroll Buttons** and the following screen will appear (Select ON to activate).

3) Confirm the selection by pressing the **Degrees Button** and the following screen appears:

4) Press the **Scroll Buttons** to set the minimum activation temperature for the sensor. The sensor is installed in the central part of the boiler and commands the appliance to start up as the boiler tube is exhausting the available heat. The setting range is from 45°C to 65°C.
5) Confirm the selection by pressing the **Degrees Button** and the following screen will appear.

6) Press the **Scroll Buttons** to set the maximum activation temperature for the sensor. The sensor commands the appliance to shut off as the boiler tube is satisfied. The setting range is from 49°C to 75°C.
The settable temperature will in any case always exceed, by at least 4°C, the temperature setting for ACS T.MIN.

7) Confirm the selection by pressing the **Menu Button.**
8) This function requires the setting of daily time bands within which the appliance manages the boiler tube. The Chrono screen will appear so you can program the weekly schedule for managing the boiler tube:

ATTENTION: If an external chronothermostat is connected to the appliance, it is not necessary to program any operating time band as the appliance will follow the cycles set in the external chronothermostat. Consequently simply press the **Menu Button** several times to exit the screen, until the initial screen appears.

After a few seconds the following screen will appear on the display:

9) To program the daily ON/OFF cycles repeat all the instructions starting from point 2 in paragraph 6.

10) To conclude the programming simply press the **Menu Button** several times to exit the screen, until the initial screen appears.

Now the operating status of the appliance appears on the screen, the shower symbol will appear and next to it the temperature detected by the sensor.

To **deactivate** ACS SUMMER function simply repeat operations 1 and 2 in this paragraph, but this time select the OFF command. The function will be disabled immediately.

ATTENTION: If the optional sensor is not connected to the appliance or is interrupted, it will not be possible to activate this function.

ATTENTION The boiler tube must have at least a 300 litre capacity.
Pay special attention to the number of ON/OFF cycles that the appliance is subjected to with this function. It is recommended not to exceed three ON/OFF cycles.

ATTENTION: If the programmed time schedule is enabled (a clock symbol appears on the display) the appliance will follow exclusively the preset ON and OFF times. No request for heat from the boiler tube will be considered by the appliance outside the programmed time interval and the texts WAIT TIME or NO PROGRAM will appear on the display (see para. 6.10).

ATTENTION: If an external chronothermostat is connected to the appliance, the appliance will follow it exclusively. No request for heat from the puffer will be considered by the appliance if the external chronothermostat does not give consent and the text WAIT TIME appears on the display (see para. 6.10).

ATTENTION: When ACS SUMMER is set the appliance will start up and shut off autonomously and only according to the temperature setting of the boiler tube and the actual temperature detected.

When is it important to use the ACS SUMMER function?

In systems configured like the nearby diagram, where the appliance is connected directly to a domestic hot water boiler tube and to the system.
Using this function the generator starts up automatically when the boiler tube is running out of heat and only in the programmed time bands.
Once the boiler tube is satisfied, the appliance does not supply heat to the system and shuts OFF.

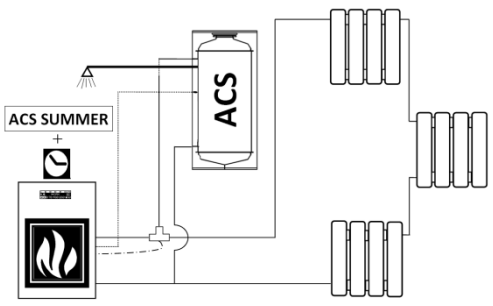

6.8 T.AMBIENT: CONTROLLING THE ROOM TEMPERATURE

The appliance must be energised and the I/0 switch in position "I".

This function enables you to control, through the use of a sensor PT 100 (optional) to be connected to pins 1 and 2 of the terminal block CN5 on the electronic board (see para. 11), the temperature of the room where the sensor will be placed.

ATTENTION: If the optional sensor is not connected to the appliance or if it is interrupted, it will not be possible to view and consequently activate the T.AMBIENT function.
When this function is activated the appliance will automatically control the ON/OFF cycles according to the temperature set by the user.

The TAMBIENT function can be activated by proceeding as follows:
1) Quickly press the **Menu Button** until the following screen appears:

After a few seconds the following screen will appear on the display:

2) Press one of the two **Scroll Buttons** and the following screen will appear (Select ON to activate).

3) Press the **Menu Button** several times, to confirm and exit the screen, until the initial screen appears.

When **TAMBIENT ON** is activated, a house symbol with the temperature detected by the sensor next to it will appear on the display as well as, in the bottom right corner, a thermometer symbol with the target room temperature next to it, as illustrated here:

The target room temperature can be changed at any time from the initial screen by simply pressing the **Scroll Buttons**.

To **deactivate** the TAMBIENT function simply repeat operations 1 and 2 in this paragraph, but this time select the OFF command. The function will be disabled immediately.

ATTENTION: If the optional sensor is not connected to the appliance or if it is interrupted, it will not be possible to activate this function.
Pay special attention to the number of ON/OFF cycles that the appliance is subjected to with this function. It is recommended not to exceed three ON/OFF cycles. If the startups are frequent and repeated it is possible that the generator will fail to start and the following error message appear: "Failed start – Clean burner". The appearance of this message is not attributable to a product defect but is caused by a brazier that requires cleaning as described in this manual in chapter entitled: "Troubleshooting – Possible Causes – Solutions".

ATTENTION: If the programmed time schedule is enabled (a clock symbol appears on the display) the appliance will follow exclusively the preset ON and OFF times. No request for heat from the room will be considered by the appliance outside the programmed time interval and the texts WAIT TIME or NO PROGRAM will appear on the display.

ATTENTION: If an external chronothermostat is connected to the appliance, the appliance will follow it exclusively. No request for heat from the room will be considered by the appliance if the external chronothermostat does not give consent and the text WAIT TIME appears on the display.

ATTENTION: The appliance controls the room temperature sensor with a 2°C hysteresis, so if for example the user sets a target temperature of 22°C when it reaches this temperature the appliance takes its power to the minimum, then switches off when the temperature reaches 24°C. It will only restart when the temperature drops below 20°C at the power previously set by the user.
ATTENTION: Do not place the room temperature sensor near any heat or cooling sources that could at any time affect the temperature detected by the sensor.

When is it important to use the TAMBIENT function?
In systems configured like the nearby diagram, where the appliance is connected directly to the system.

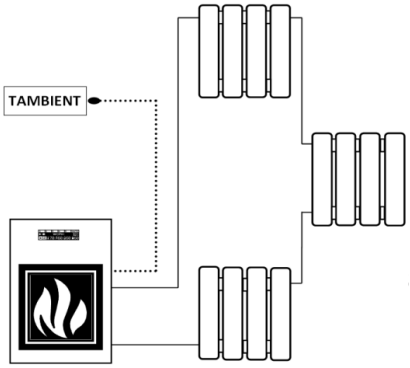

In this case the room temperature sensor controls the activation of the ON/OFF cycle for the appliance according to the set temperature.
If the dwelling is fitted with zone valves, with this type of installation, it is mandatory to deactivate the valves by opening them completely.
Consequently the dissipation of heat, at least equal to or greater than the minimum power output to the water in the appliance, must be guaranteed at all times.

6.9 THERMO ACS: CONTROLLING A CONFIGURED BOILER TUBE IN A SYSTEM

The appliance must be energised and the main switch in position [**I**] .
This function enables control of the operating temperature of a boiler tube for the production of domestic hot water (ACS) through the use of a sensor PT 100 (optional) connected to the appropriate terminal block (see dedicated paragraph).
When this function is activated the appliance automatically controls the diverting valve to give priority to the domestic hot water. Once the boiler tube is satisfied, the appliance switches the diverting valve to the system or the puffer (if installed) if they require heat.

ATTENTION: If the optional sensor is not connected to the appliance or if it is interrupted, it will not be possible to view and consequently activate the THERMO ACS function.
The THERMO ACS function can be activated by proceeding as follows:

1) Quickly press the **Menu Button** until the following screen appears:

After a few seconds the following screen will appear on the display:

2) Press one of the two **Scroll Buttons** and the following screen will appear (Select ON to activate).

3) Confirm the selection by pressing the **Degrees Button** and the following screen will appear:

4) Press the **Scroll Buttons** to set the minimum activation temperature for the sensor. The sensor is installed in the central part of the boiler tube and commands the appliance to start the boiler if it is off. On the other hand if the appliance is operating, it commands the diverting valve as the available heat inside it is coming to an end. The setting range is from 45°C to 65°C.
5) Confirm the selection by pressing the **Degrees Button** and the following screen will appear.

6) Press the **Scroll Buttons** to set the maximum activation temperature for the sensor. The sensor commands the appliance to shut off if it is ON, whereas if the appliance is operating, it commands the diverting valve as the boiler tube is satisfied. The setting range is from 49°C to 75°C.
   Attention: The maximum temperature will always exceed, by at least 4°C, the minimum set temperature.
7) Confirm the selection by pressing the Degrees Button followed by the Menu Button.

At this point the appliance operating status will appear on the display.
To **disable** the THERMO ACS unction simply repeat operations 1 and 2 selecting the OFF command. The function will be disabled immediately.

When this function is activated the appliance operates at the automatic power when the domestic hot water boiler tube is requesting heat, it then reverts back to the power selected by the user when the boiler is satisfied.

ATTENTION: The boiler tube must have at least a 300 litre capacity.
If the optional sensor is not connected to the appliance or if it is interrupted, it will not be possible to activate this function.
Pay special attention to the number of ON/OFF cycles that the appliance is subjected to with this function. It is recommended not to exceed three ON/OFF cycles. If the startups are frequent and repeated it is possible that the generator will fail to start and the following error message appear: “Failed start – Clean burner”. The appearance of this message is not attributable to a product defect but is caused by a brazier that requires cleaning as described in this manual in chapter entitled: “Troubleshooting – Possible Causes – Solutions”.

ATTENTION: If the programmed time schedule is enabled (a clock symbol appears on the display) the appliance will follow exclusively the preset ON and OFF times. No request for heat from the boiler or system will be considered by the appliance outside the programmed time interval and the texts WAIT TIME or NO PROGRAM will appear on the display.

ATTENTION: If an external chronothermostat is connected to the appliance, the appliance will follow it exclusively. No request for heat from the boiler tube or system will be considered by the appliance if the external chronothermostat does not give consent and the text WAIT TIME appears on the display.

When **ACS ON** is activated the shower symbol with the temperature detected by the sensor will appear on the display. The shower symbol will flash if the boiler tube requesting heat, whereas it will remain steady if the boiler tube is satisfied.

When is it important to use the THERMO ACS function?

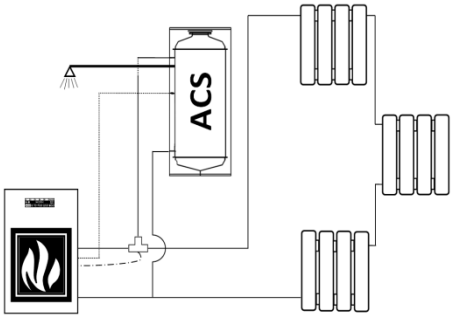

In systems configured like the nearby diagram, where the appliance is connected directly to a domestic hot water boiler tube and to the system.
When using this function the generator starts up automatically when the boiler tube is running out of heat. Once the boiler tube is satisfied, the appliance switches the 3-way valve to provide heat to the system.
We recommend installing a chronothermostat to prevent the appliance from being stressed by uncontrolled ON and OFF cycles.

When is it important to use the THERMO ACS function together with the THERMOCONTROL function?

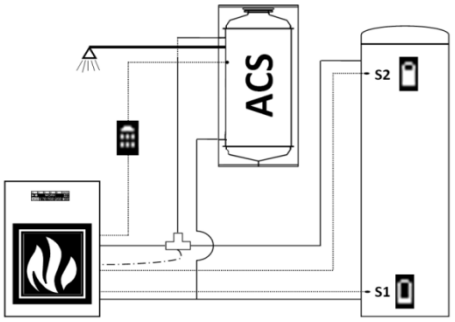

In systems configured like the nearby diagram, where the appliance is installed in a system fitted with both a boiler tube and a puffer.
Activate the THERMOCONTROL function to control the puffer and the THERMO ACS function to control the boiler tube. With this logic the appliance controls the ON/OFF cycles automatically according to the heat requests from both the puffer and the boiler tube. Precedence is always given to the boiler tube, and once satisfied, the appliance switches the 3-way valve and diverts the heat to the puffer and when it is satisfied it switches OFF.

When is it important to use the THERMO ACS function together with the TAMBIENT function?

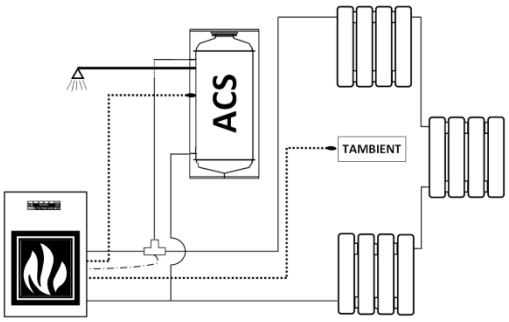

In systems configured like the nearby diagram, where the appliance is connected directly to a domestic hot water boiler tube and to the system.
When using this function the generator starts up automatically when the boiler tube is running out of heat.
Once the boiler tube is satisfied, the appliance gives consent for the 3-way valve to switch over in order to supply the system with heat. When the room temperature is satisfied the appliance turns to the OFF position, and waits for the next request for heat from the boiler tube or the room.

6.10 OPERATION OF THE GENERATOR

6.10.1 DESCRIPTION OF THE OPERATING STAGES

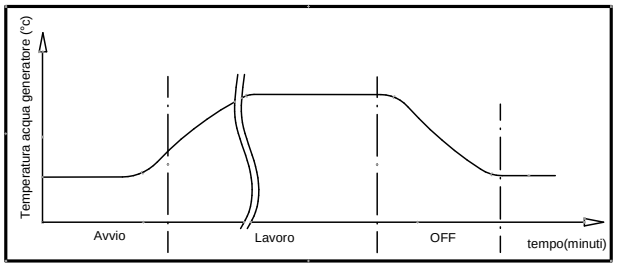

START: has a duration of approx. 20 minutes, during this phase the appliance is programmed to light the flame. The appliance will not accept power variations in the firebox. If the appliance does not start up correctly it could be due to one of the following factors: cleanliness of the generator, smoke exhaust particularly cold, sudden surges and drops in the electric power supply, fuel is too moist or does not comply with the specifications.

WORK: the duration depends on the ability of the system to receive heat. The generator's operating status is displayed. During this stage the brazier cleaning mechanism “Pellet Power”, that is, the device installed inside the brazier, moves in timed mode.

Legenda	**Key**
Temperatura acqua generatore (°C)	Generator water temperature (°C)
Avvio	Start
Lavoro	Running
Off	Off
Tempo (minuti)	Time (minutes)

OFF: has a duration of approx. 25 minutes. In this phase the appliance is switched off until a new "on" phase is initiated. The aim is to make the pellet embers in the brazier die out. A few seconds aftet the activation of the OFF cycle the brazier cleaning mechanism “Pellet Power”, that is, the device installed inside the brazier, moves in continuous mode. After approx. 25 minutes the appliance goes to standby and the brazier cleaning mechanism “Pellet Power” stops.

ATTENTION: It is recommended to verify at least once a month that when the appliance is in OFF mode in the time interval specified above, the brazier cleaning mechanism “Pellet Power” operates in continuous mode to clean the brazier.

STOP: If the temperature of the appliance exceeds the 80°C threshold, the momentary shut off, identified as STOP, is activated.
ATTENTION: The STOP phase allows the generator to begin a new START phase only when the temperature drops below 58°C.
ATTENTION: The STOP mode must be considered an overtemperature pre-allarm, and therefore cannot be considered a normal operating stage.

WAIT ON: when the appliance is restarted while hot where the water temperature is higher than 63°C the appliance does not start immediately, but the circulating pump will still be active. The message WAIT ON appears on the display. A new startup procedure will not begin until the temperature drops to 58°C. The text START will appear on the screen.

SUN OUT: this function only activates automatically if the THERMOCONTROL function is turned to ON and if solar panels are connected to the puffer. When Sensor S2 detects a temperature over 80°C and the appliance is in OFF mode, the text SUNOUT will appear on the display accompanied by the circulating pump active indicator and activation of the smoke suction unit at the maximum power.
When the temperature of sensor S2 drops below 75°C, the SUNOUT text deactivates and OFF appears in its place; the circulating pump and the smoke suction unit switch off.
This guarantees the dissipation of the excess heat from the solar panels, a situation that could easily arise on the Summer days.

WAIT TIME: The Chrono programming has been activated and the appliance is waiting for the first scheduled ON cycle to activate itself; it is similar to the OFF cycle except that in this function the appliance waits for the time programmed by the user to reactivate.

NO PROGRAM: The Chrono programming has been activated by pressing the clock button, but no valid programming was made.

6.10.2 SETTING RANGE

Heat transfer occurs according to the anticondensation principle, that is by activating the circulating pump at 61°C. Activating the circulating pump at a lower temperature could lead to the formation of acid condensation which is extremely harmful for the components of the appliance and seriously affect their duration.

6.10.3 AUTOMATIC CYCLE

In the automatic cycle the appliance expresses its maximum operating flexibility by optimising the fuel consumption. To activate the AUTO cycle, select the power bars up to the sixth bar containing the text **AUTO**.
During the AUTO cycle the appliance self-regulates the combustion function according to the temperature of the water in the boiler set with the **Degrees Button**. The setting range is between 65°C and 73°C.

ATTENTION: We recommend against activating the Auto function if the THERMOCONTROL function is active in the appliance.

Example:
If for example the temperature is set at 70°C the five speed levels will be automatically distributed between 61°C and 70°C so that with a temperature set at 70°C the appliance is at its minimum power level.
If the temperature value is increased or reduced all the power levels will be redistributed along the new temperature range. We therefore recommend finding the correct temperature in order to optimise the full potential of the produced heat..
If the value is set at a high temperature, let's say 73°C, the appliance will attempt to reach that level as quickly as possible by modulating the power as it approaches the set temperature. It is not necessary to set high t max temperatures when the ambient conditions do not require them. Time and experience in using the appliance will give you the possibility of determining which are the most appropriate SET POINTS for your needs. If the combustion power is not absorbed by the system above a temperature of 80° C the appliance will temporarily shut down and the word STOP will appear in the display. Reactivation will occur automatically when the temperature drops to 58°C.

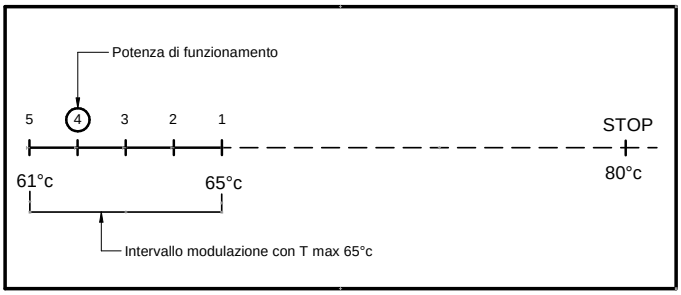

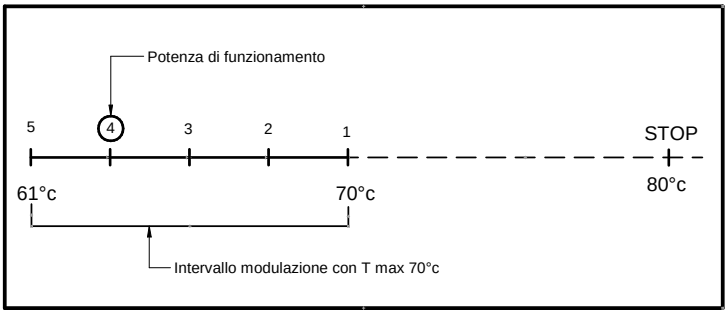

Legenda	**Key**
Potenza di funzionamento	Operating power
Intervallo modulazione con T max 65 °C	Modulation frequency with T max 65°C
Intervallo modulazione con T max 70 °C	Modulation frequency with T max 70°C

6.10.4 MANUAL OPERATING CYCLE

The manual cycle is indicated on the display by the power bars. The power expressed in this cycle remains always constant independently from the power absorbed by the system. As always, the system's circulating pump is activated at the anticondensation temperature, that is above 61°C.
In the manual operating mode the power remains as set until the maximum temperature of 80°C is achieved, then the generator temporarily shuts off and displays the word STOP. Reactivation will occur automatically when the temperature drops to 58°C.

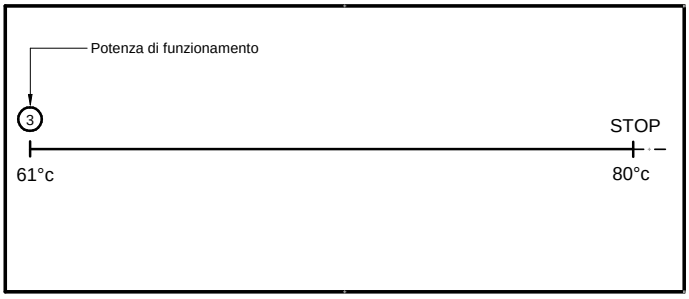

Legenda	Key
Potenza di funzionamento	Operating power

6.11 SWITCHING ON THE APPLIANCE

Before using the appliance check that all the movable parts are correctly fitted. Also remove any labels and stickers from the glass to avoid that permanent traces remain on the surfaces. Verify that the electric and hydraulic connections have been made perfectly. Check also (during all the operating phases) that the firebox door is always firmly closed.

Then carry out the following operations:
• Check that the hydraulic system has been correctly executed and has an adequate expansion tank to guarantee maximum safety. The expansion must be calculated as specified in UNI 10412/2. Any damage to the system and/or appliance will not be covered by warranty. The presence of an expansion tank in the appliance guarantees protection against the thermal expansion of the water only in the boiler NOT the whole system.
• Fill the system using the inlet tap.
• Power up the appliance and turn the switch installed at the back to position "1" (= ON).
• During the replenish stage it is recommended not to overdo the pressure in the appliance: max pressure 1.5 bar.
• The water fill phase must be simultaneous with the air purge.
• Connect the smoke exhaust to the appliance: we recommend against using aluminium tubes and we recommend always using sealing gaskets. Further information is given in paragraph dedicated to the smoke discharge of this use and maintenance booklet.
• Load the pellets into the hopper.
• Press the **Flame Button** to begin the start up phase and the word **START** will appear on the display.
• Check the pressure in the appliance system once again and if necessary bleed any air bubbles from the valve.

Press the **Flame button** repeatedly to set the appliance in AUTO or manual operating mode. The mode will be activated at the end of the start up phase.
By pressing the **Degrees Button** you can regulate the desired water temperature in the boiler. During the 20 minutes of the start up phase any set thermal power level is ignored to deal with correct fill up and suction values preset by the Manufacturer. The electrical heater will start to overheat and only after a few minutes the first lot of pellets will start dropping into the brazier. This occurs because the screw feeder has to fill up because it is completely empty. At the first start up the appliance may require the starting sequence to be performed twice for the reason explained above: before starting up the second time empty and vacuum out the brazier.

ATTENTION: The start up phase (word START appearing on the display) takes approx. 20 minutes during which the appliance ignores any commands transmitted to it. Once this phase has ended the word WORK appears on the display. When the machine is in the running phase the combustion can be adjusted manually or in AUTO mode.

ATTENTION: The system circulating pump only activates when the temperature in the boiler reaches 61°C.
ATTENTION: If the appliance does not start up correctly check that the brazier and electric heater are clean. It is very important to ensure that the tube lodging of the electric heater is clean; there must be no deposits or dust. It is recommended to use an efficient ash vacuum cleaner but only when the appliance has cooled down.

6.12 SWITCHING OFF THE APPLIANCE

To switch off the appliance press the **Flame Button** until the power bars on the display disappear and the text OFF appears.

DO NOT disconnect the generator from the electric power socket to switch it off. This operation generates smoke that could not be evacuated because of the construction characteristics of the flue outlet.
The OFF procedure lasts for approx. 25 minutes.

7 – ROOM TEMPERATURE THERMOSTAT / CHRONOTHERMOSTAT (not supplied)

Your appliance is already fitted with all the temperature adjustment and programming functions. However, the appliance can be connected to an additional room temperature thermostat or to an additional chronothermostat:

- Additional **room temperature thermostat**: connect the terminals directly to the terminal block on the circuit board, as illustrated in the image below.
- Additional **Chronothermostat - Modem**: connect the terminals directly to the terminal block on the circuit board, as illustrated in the image below.

The contacts of the room temperature thermostat and of the chronothermostat modem, are defined as "potential free" contacts and they must never be supplied with 230V. If the board is powered with 230 V or lower voltages, the control board would be irreparably damaged and the warranty voided.
When the external room temperature thermostat or the external room temperature chronothermostat, connected to the terminal block of the Chronothermostat Modem, activate they start up the generator and the text **EXT** appears on the display.

This operation must be exclusively performed by qualified professional staff, as set forth by Decree no. 37 of 22nd January 2008 and applicable laws on the subject. Before performing said task, make sure the power supply cable is disconnected from the electrical power socket.

7.1 OPERATING WITH THE ADDITIONAL ROOM TEMPERATURE THERMOSTAT (NOT SUPPLIED)

An additional room temperature thermostat can be installed by connecting it to the inside of the electronic board compartment, using contacts 7 and 8 on terminal block CN7 as illustrated in the figure below. It has a “potential free” contact, that is a very low voltage contact. The operating principle is as follows:

• When the room temperature reaches the set temperature, the room thermostat **closes** the contact, the appliance will operate at the minimum combustion power and the 1st power bar will flash on the display, any manual power change will be disabled.
• When the room temperature drops the thermostat **opens** the contact and the appliance returns to its original position in terms of thermal power.

ATTENTION: N.C. “**Normally Closed**” contacts must be used for the connection to the additional room temperature thermostat. Do not power the contacts with mains voltage as this would seriously damage the control board, and is not covered by warranty.

7.2 OPERATING WITH THE ADDITIONAL CHRONOTHERMOSTAT (NOT SUPPLIED)

An additional chronothermostat can be installed by connecting it to the inside of the electronic board compartment, using contacts 9 and 10 on terminal block CN7 as illustrated in the figure below. Using this output when the chronothermostat contact **closes** the START cycle begins, whereas when the contact **opens** the OFF cycle begins. When the chronothermostat is active the appliance cannot be switched off manually but only from the additional chronothermostat.

ATTENTION: The manufacturer denies all responsibility for the life of the electrical heater if subjected to excessive start up cycles. Consequently, it is advisable to set the chronothermostat appropriately. If an external chronothermostat is connected to the appliance it will not be possible to use the Chrono function on the panel.

ATTENTION: Use N.O. (**normally open**) contacts for the connection to the chronothermostat. Do not supply direct power of 230 V or lower voltages as this would seriously damage the control board, and is not covered by warranty.

ATTENTION: In the event of connections to the chronothermostat Thermorossi shall not be held responsible for the appliance not starting up, smoke leaks, breakage of the lighting component. The user must make sure that the brazier is always clean.

ATTENTION: When using the chronothermostat program **up to a maximum of 3 on-off cycles**. The chronothermostat must have a thermal hysteresis that is not less than 2°C.

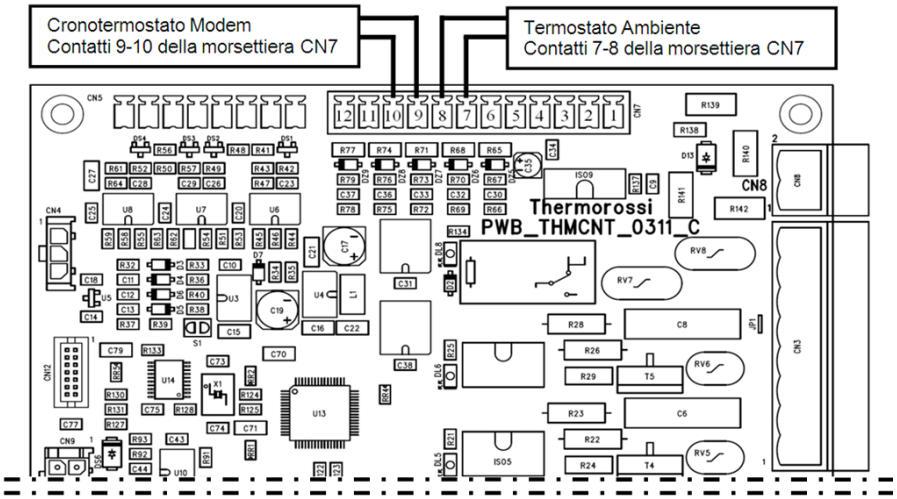

Legenda	**Key**
Cronotermostato Modem	Chronothermostat - Modem
Contatti 9-10 della morsettiera CN7	Contacts 9-10 of the terminal block CN7
Termostato Ambiente	Room Temperature Thermostat
Contatti 7-8 della morsettiera CN7	Contacts 7-8 of the terminal block CN7

When is it important to use a CHRONOTHERMOSTAT?

In systems configured like the nearby diagram, where the appliance is connected directly to the system.
In this case the chronothermostat controls the ON/OFF cycles of the appliance according to the programmed time bands or the temperature setting.
If the dwelling is fitted with zone valves, with this type of installation, it is mandatory to deactivate the valves by opening them completely.
Consequently the dissipation of heat, at least equal to or greater than the minimum power output to the water in the appliance, must be guaranteed at all times.
The chronothermostat must have a thermal hysteresis that is not less than 2°C.

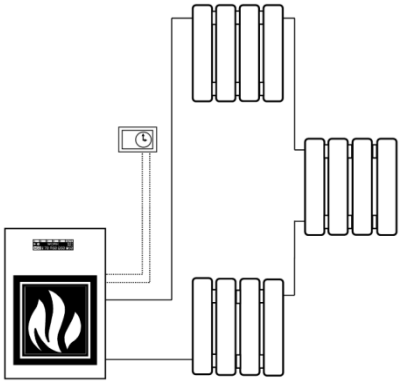

8 - CLEANING AND MAINTENANCE

8.1 FOREWORD

Before beginning any maintenance operation ensure that the appliance is switched OFF and disconnected from the electric power socket. Your appliance, being a pellet-fuelled appliance, requires regular general controls and cleaning. This will guarantee regular operation and optimal output at all times. If the product is unused for a prolonged period of time before starting up it is mandatory to inspect the smoke channel and outlet to ensure that there are no obstructions. It is important to carefully follow the instructions set out below: failure to observe these instructions could cause serious damage to the product, to the system, to objects and to persons using the generator.

Attention: do not wet the appliance and do not touch the electrical parts with wet hands. Never vacuum hot ash: this could damage the vacuum device. All the cleaning operations described in this manual must be carried out when the appliance is cold.

The user must periodically clean the appliance, or have an authorised service centre clean it, as described in this manual. Moreover, once a year it is advisable to have an inspection carried out of the hydraulic system and the functionality of the flue outlet.

8.2 CLEANING AND MAINTENANCE

Due to the frequent cases we have encountered of the use of poor quality pellets, users are advised that it is mandatory to use, in this appliance, pellets certified in accordance with the regulations in force for the Italy UNI market or for the European EN market. If this requirement is not observed the result will be unsuitable combustion, consequently, the electrical and electronic components could be subjected to very high temperatures and will not be covered by warranty.

Unless otherwise instructed, the operations described below are mandatory and not postponable beyond the specified times.

EVERY DAY:
• Thoroughly clean the burner (Figure 1) with a vacuum cleaner; carefully clean the area around the spark plug. This is to ensure that the appliance operates correctly and to avoid start up failures.
• Move the tube scraper lever up and down vigorously at least 4/5 times (Figure 2).

EVERY WEEK:
• Open the firebox door and check that the area where the Pelletpower® scraper works is sediment-free (Figure 1).
• Check that the holes of the burner and the heater lodging channel is completely sediment-free. If necessary vacuum and clean (Figure 1)
• Remove, if present, all silica agglomerates; they indicate poor quality fuel.
• Empty the ash from the pan **C1** (Figure 3)
• Vacuum the ash from the compartment **C2** (Figure 4). When replacing the inspection cover check the condition of the gasket. If necessary replace the gasket.
• Lift the inspection covers (Figure 5) and thoroughly vacuum the inspection compartments **C3**, then make sure that the covers close perfectly.

EVERY MONTH:
• Inspect and clean the Tee-joint of the smoke exhaust pipe.
• Vacuum, when empty, the saw dust on the bottom of the pellet tank.
• Check that the smoke exhaust pipe is free from any ash deposits, above all in the initial parts that could have a smaller section.

EVERY TWO MONTHS:
• Vacuum the ash in the top smoke circuit compartment (Figure 7). To access the compartment remove the casings of the appliance, the screw that fixes the tank cover (Figure 6), and cover A. Undo the wing nuts and unscrew the turbulator shaker knob. Remove the cover making sure you do not damage its insulation (Figure 7).

Attention: take special care when handling the cover and avoid knocking or dropping it. Accidental breakages are not covered by warranty.
Attention: to guarantee correct and optimal combustion it is very important to correctly and hermetically close the top cover after servicing.

AT LEAST TWICE A YEAR:
• Clean the flue outlet. If there are any horizontal sections, inspect them and clean out any ash and soot deposits before they block the passage of the flue gases.

AT THE END OF THE WINTER SEASON (or whenever necessary)
• Perform a thorough overall cleaning of the firebox and pans with brushes and vacuum cleaners.

A vacuum device simplifies the ash cleaning procedure. It is also normal to find partially or totally unburned pellets in the ash pan. The door of the combustion chamber must only be opened when the appliance has completely cooled down: when it is opened it is normal for some ash to spill onto the floor.

ATTENTION: after cleaning it is mandatory to carefully check that the combustion chamber door is firmly closed and airtight.
ATTENTION: the generator, the smoke channel and flue outlet must be cleaned in accordance with the specifications described above and use of inflammable products is strictly forbidden: using inflammable products can create dangerous situations. Failure to carry out the necessary maintenance or if only partial maintenance is carried out will affect the correct functioning of the appliance. Any problems resulting from total or partial lack of cleaning or maintenance will immediately void the warranty.
ATTENTION: if the appliance remains inactive (and/or not used for over a month) the generator, the smoke discharge tube and the flue outlet must be thoroughly cleaned and checked for any possible obstructions (e.g. birds nests in the chimney cap) before restarting.

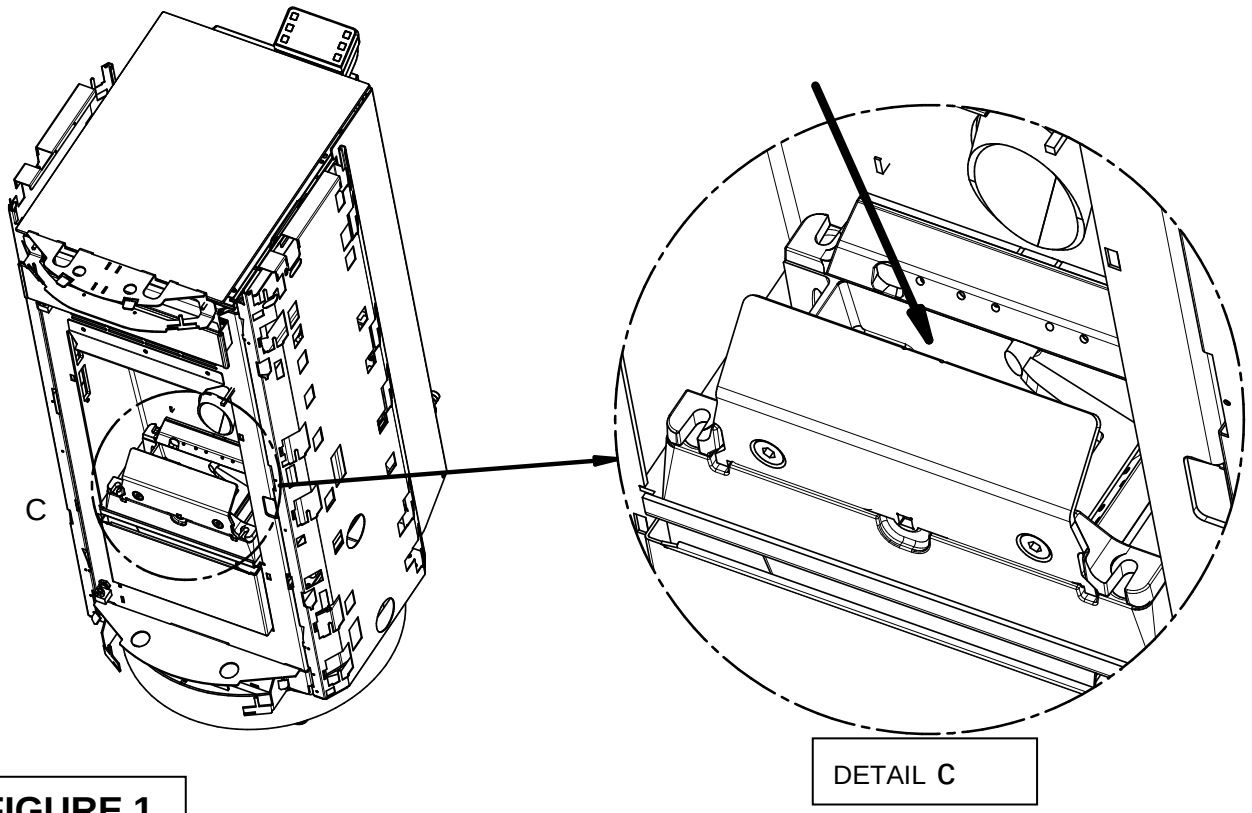

FIGURE 1

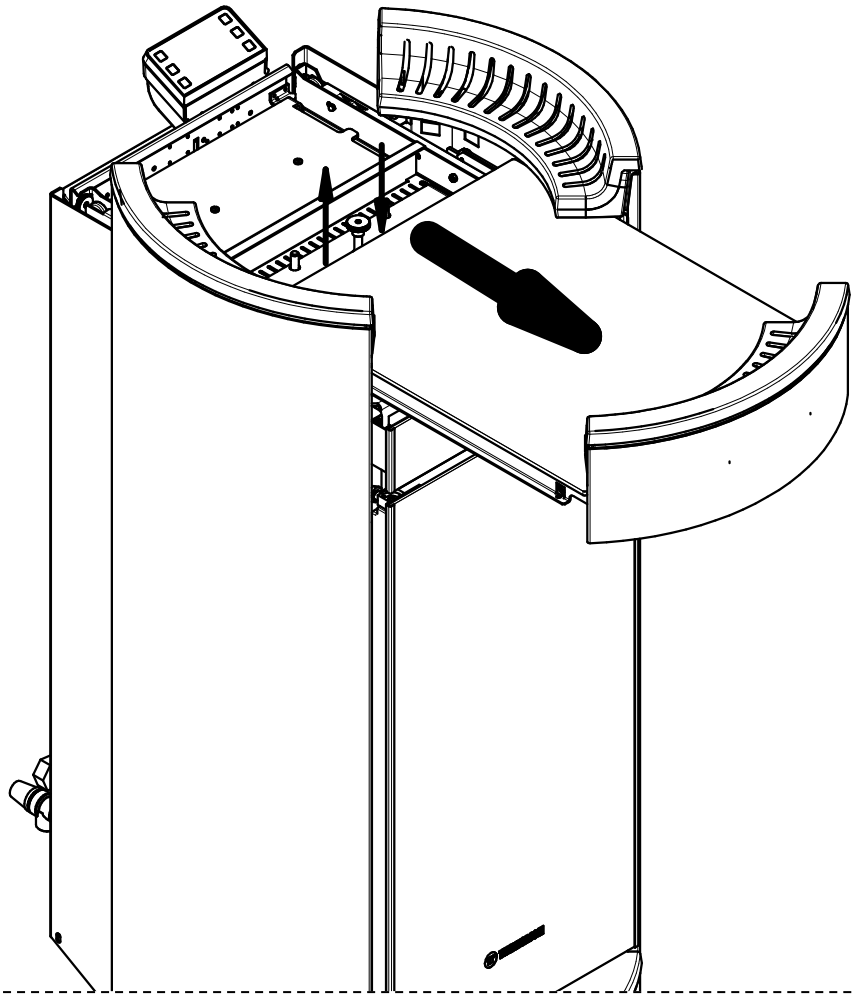

FIGURE 2

FIGURE 3

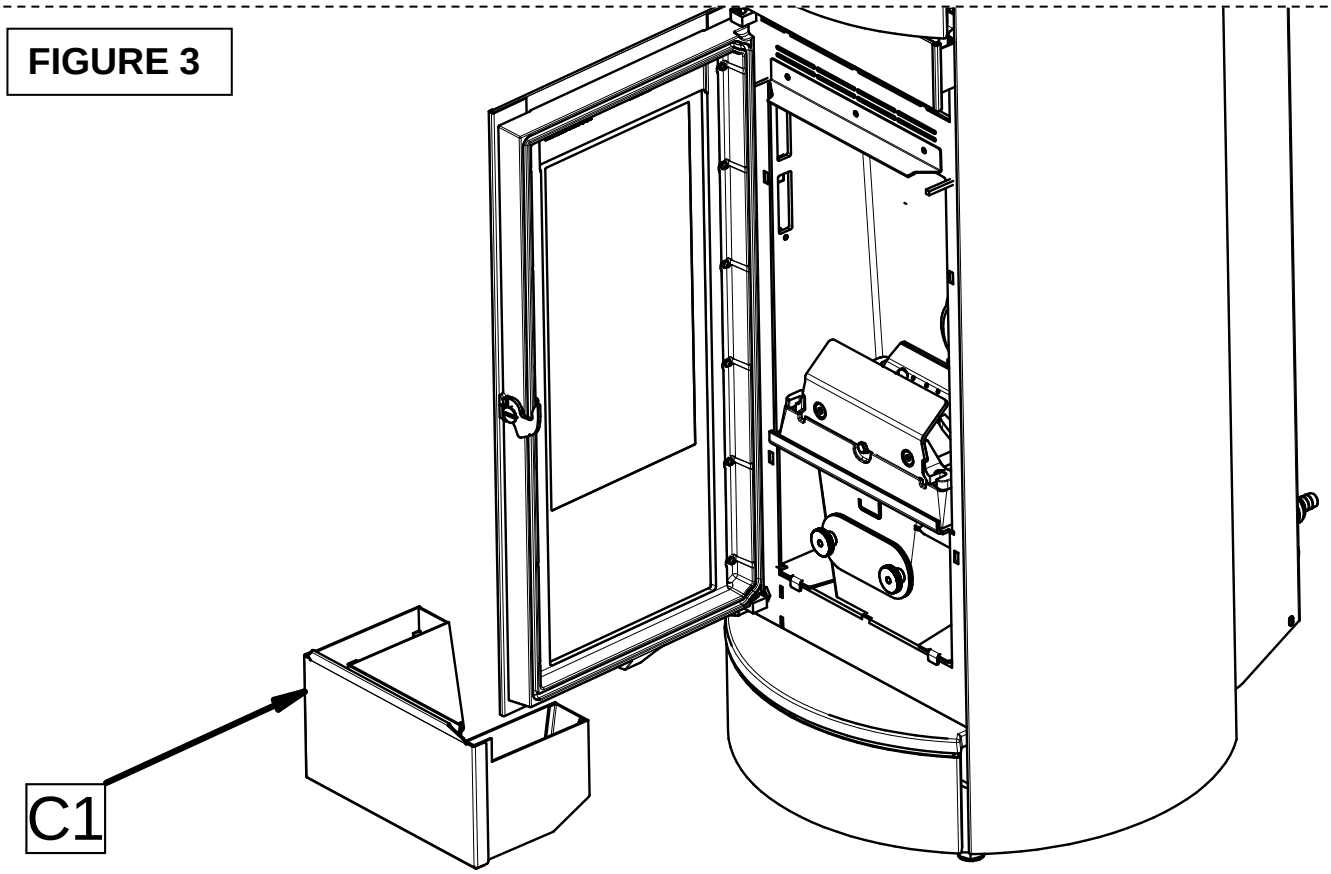

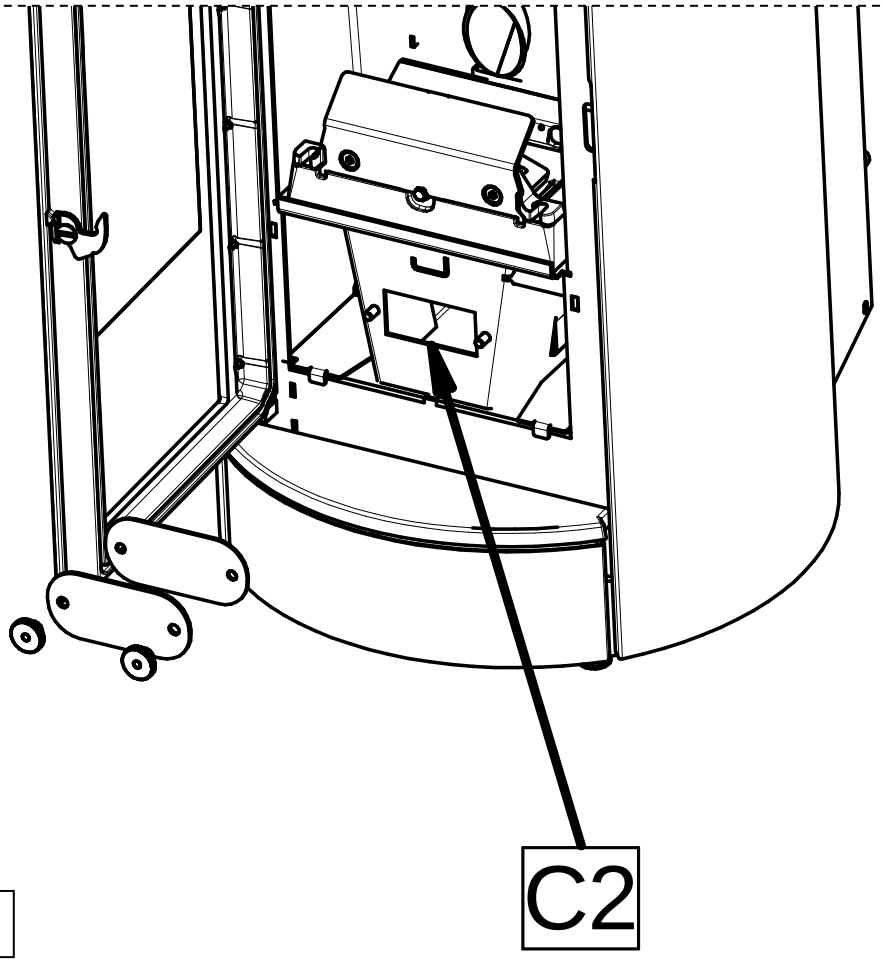

FIGURE 4

FIGURE 5

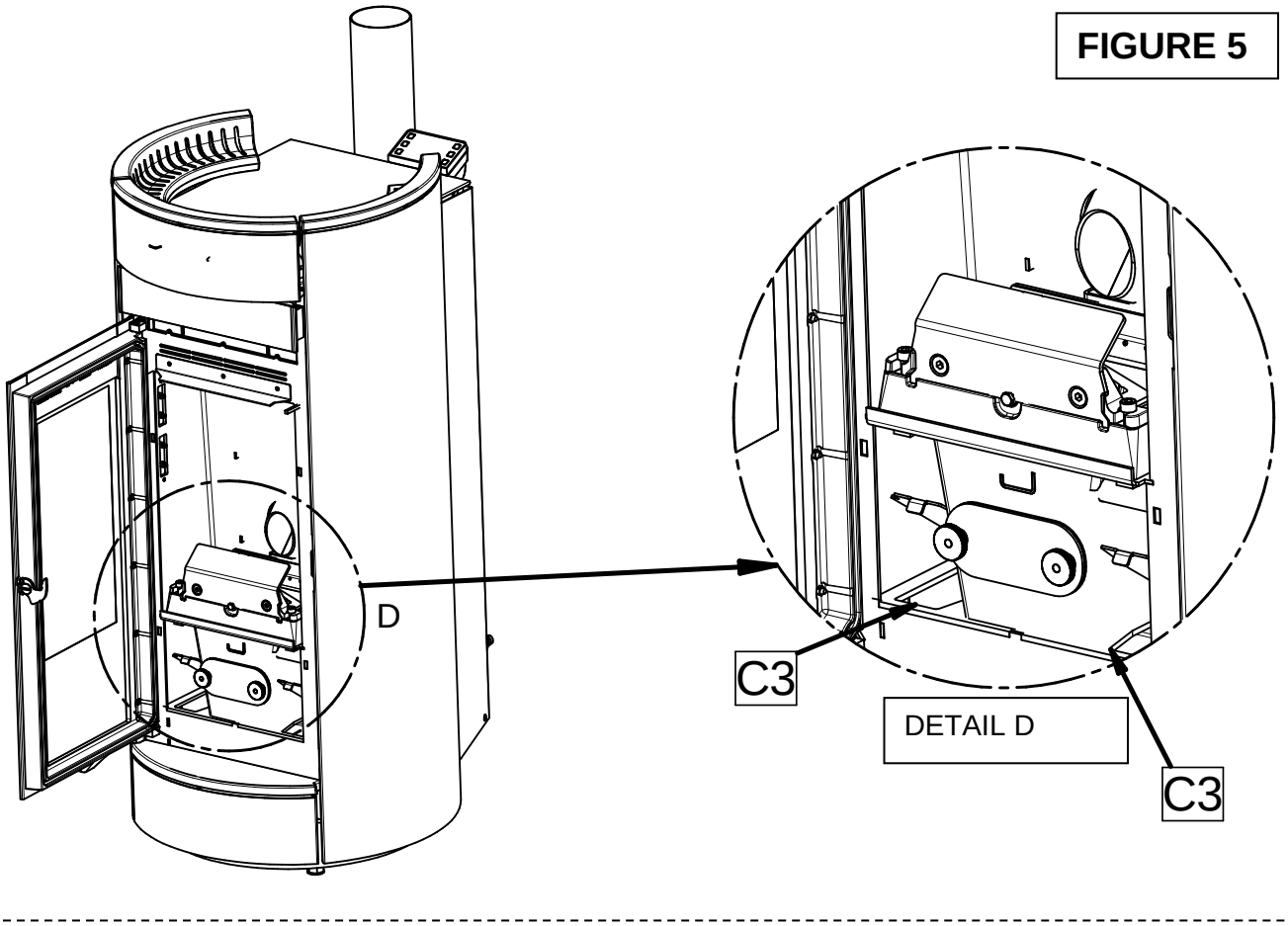

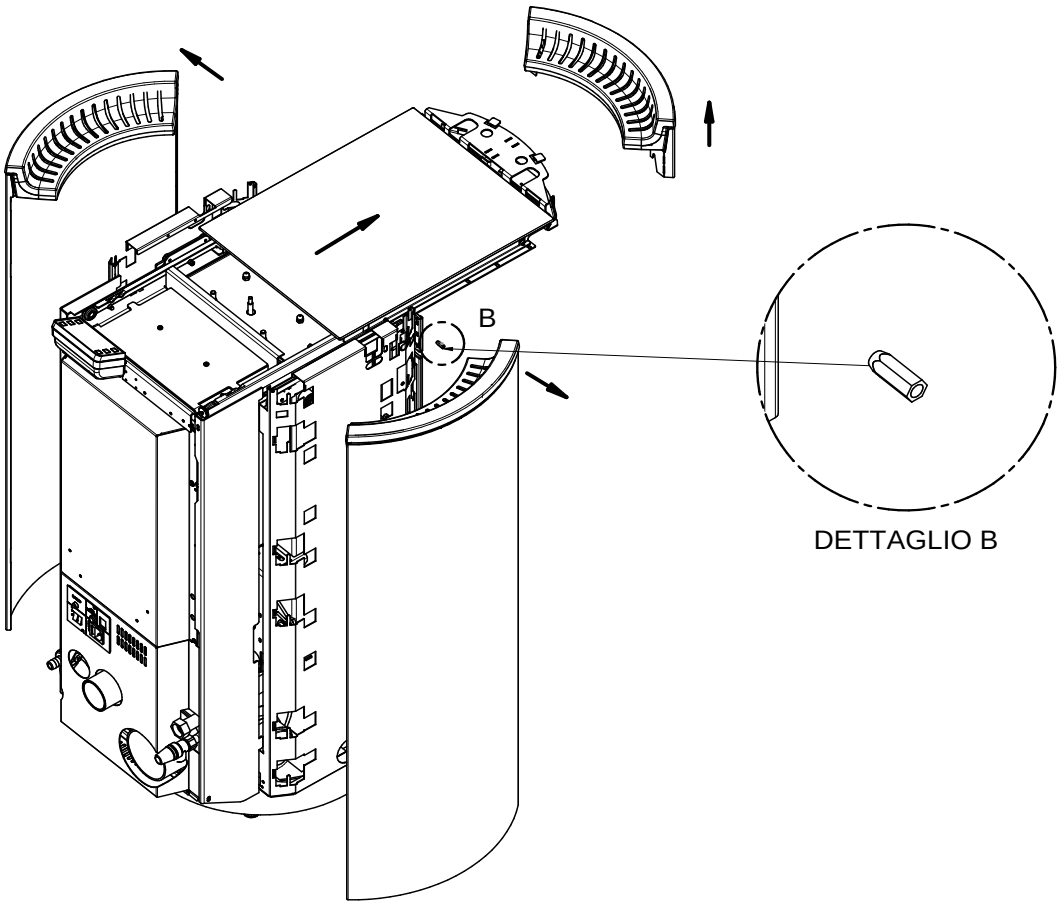

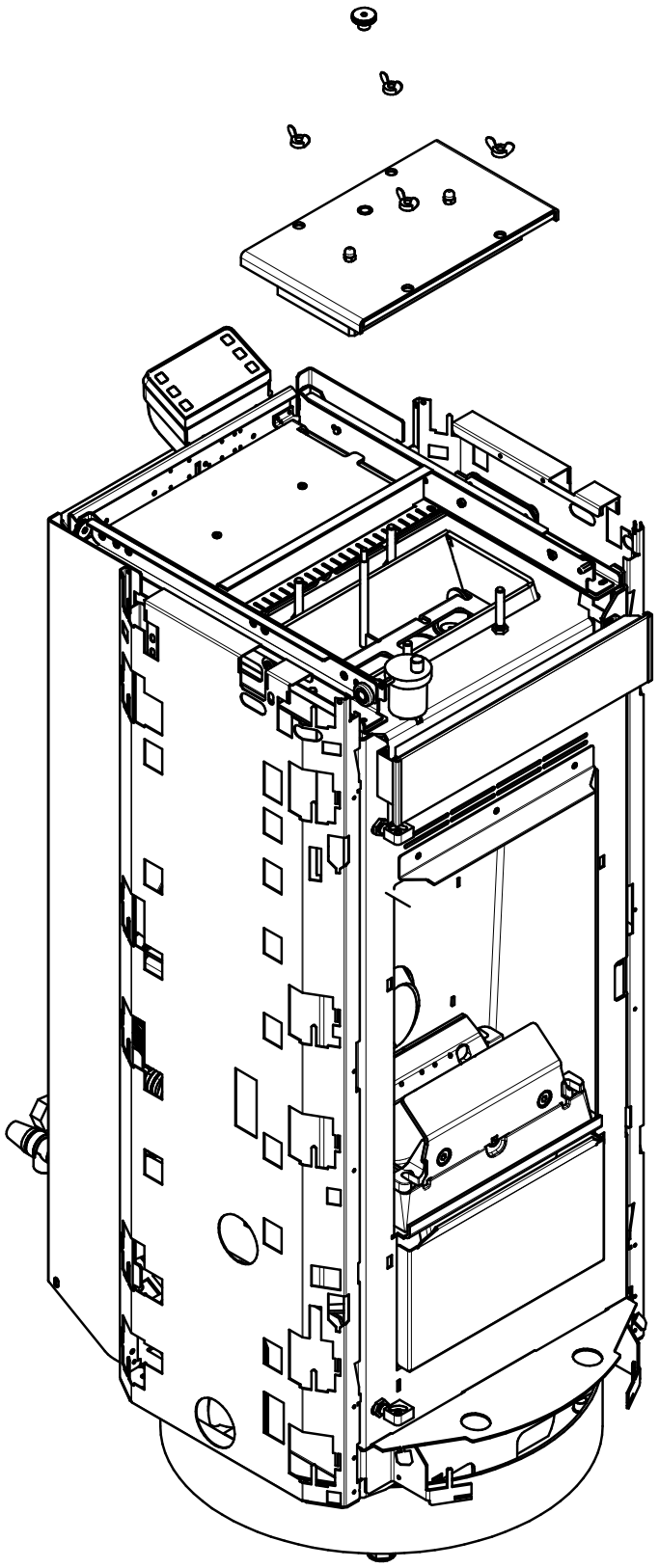

9 – SMOKE DISCHARGE TUBE AND VENTILATION OF THE ROOMS

9.1 FOREWORD

Due to the frequent accidents caused by poor functioning of flue outlets installed in private dwellings, we have prepared the following paragraph to assist the installer in his inspection of the parts concerned with eliminating the gases produced by combustion.

The smoke outlet must be fitted in compliance with standard UNI 7129/92, UNI 10683 and EN 14785 and it must observe the reference values laid down in the standard, in particular, the outlet must comply with fire prevention regulations.
It is important to carefully follow the instructions set out below: failure to observe these instructions could cause serious damage to the product, to the system, to objects and to persons using the generator.

9.2 ROOM VENTILATION

ATTENTION: the presence of extraction fans or similar appliances, if operating in the same room or space in which the product is installed, could cause problems for the correct operation of the product.
ATTENTION: do not obstruct the vents or the air inlets on the appliance.

The room where the appliance is installed must have a good air flow to guarantee air for the appliance for the combustion process and for ventilation of the room. The natural air flow must take place directly through permanent openings on the outer walls or through single or multiple ventilation ducting (paragraph 9.2.1).
The ventilating air must come from outside and if possible, away from sources of pollution. The openings in the walls must comply with the following conditions:
• have an unobstructed section of at least 6cm² for each Kw of installed thermal power, with a minimum limit of 100cm²;
• be made in such a way that the vent openings, both on the inside and outside of the wall, cannot be obstructed;
• be protected with grills or similar systems that do not reduce the opening section indicated above;
• be situated at a height near floor level and they must not obstruct the correct operation of the combustion product discharge devices; if this position is not possible the section of the ventilation openings must be enlarged by at least 50%.

9.2.1 VENTILATION FROM ADJOINING ROOMS

The air flow can also be obtained from an adjoining room as long as:
• the adjoining room is equipped with direct ventilation in compliance with the paragraphs described above;
• only appliances connected to the exhaust pipe are installed in the room that is ventilated;
• the adjoining room is not used as a bedroom or a common area of the building;
• the adjacent room is not a room with a fire hazard, such as storage sheds, garages, combustible material store rooms, etc...;
• the adjoining room does not become a vacuum compared to the room to be ventilated due to a reverse draught effect (the reverse draught can be caused by the presence in the room of either another heating appliance running on any type of fuel, a fireplace, or any suction device, which have not been provided with an air intake)
• the air flow from the adjoining room to the room to be ventilated is unobstructed through the permanent apertures having an overall net section of no less than that indicated above. These apertures can be obtained by enlarging the space between the door and the floor.

9.2.2 SINGLE OR MULTIPLE VENTILATION DUCTING

If the combustion air is supplied through pipes, the available draught, produced by the installed appliance in use and by the corresponding combustion product evacuation system, must be greater than the sum of the resistance offered by the pipes (frictional resistance, resistance due to direction changes, cross-sectional restrictions, etc...).
The single ventilation pipes can be vertically and horizontally oriented: the length of the horizontal sections must be reduced to a minimum.
The connectors between pipes with different orientations must not have any reduced cross-sections with sharp bends.
The angle of connection between the axes of two successive pipes must not be less than 90°.
For combustion air supplied through branched pipes, the sum of the resistance offered by the pipes (frictional resistance, resistance due to direction changes, cross-sectional restrictions, etc....) can be a maximum of 10% of the available draught, produced by the various appliances in use installed on the various floors and by the combustion product evacuation system.
The branched ventilation pipes must be vertically-oriented with an uphill run.
The inlet vent to the room to be ventilated must be located down low and in a position where it does not interfere with the discharge of combustion products and must be protected by a grill or similar device.

9.3 SMOKE OUTLET

The smoke channel, the exhaust pipe, chimney and flue outlet (defined as the system for the evacuation of combustion products), are parts of the heating system and they must comply with the legislative requirements of the Ministerial Decree DM 37/08 (ex Italian Law 46/90) and to the applicable specific installation regulations, according to the type of fuel. Fireplaces, stoves and barbecues must not be installed in locations where gas appliances type A and type B are present and operating (for the classification see UNI 10642 and UNI 719). The connection between the appliance and the flue outlet must only receive exhaust from one heat generator.

The installer must provide one or more access points on the flue outlet to check the emissions once the appliance has been installed; these access points must be made in such a way as to be air-tight sealable to prevent exhaust gas leaks.

The appliance is equipped with a smoke exhaust motor, it works in low pressure and with very low smoke temperatures, consequently it is recommended to insulate it and to ensure that the flue outlet is sized appropriately in order to avoid the possible risk of creating condensation.

9.3.1 CHIMNEY TYPES

The following types of chimneys, constructed as described, are possible:

• System: Chimney installed using a combination of compatible components (flue liner, insulation, outer casing etc…), constructed or specified by a single manufacturer and CE certified in accordance with the applicable standard;

• Composite chimney: Chimney installed or constructed on site using a combination of compatible components such as flue liner (wall directly in contact with the smoke), and possibly also insulation and outer casing (wall) that may be supplied by different manufacturers or by the same manufacturer.

• Relining: operation involving the installation of a specific pipe in an existing shaft (even if newly constructed) made of non-combustible materials, free from obstructions and for single use.

9.3.1 CHIMNEY TYPES

The following types of chimneys, constructed as described, are possible:

• System: Chimney installed using a combination of compatible components (flue liner, insulation, outer casing etc…), constructed or specified by a single manufacturer and CE certified in accordance with the applicable standard;

• Composite chimney: Chimney installed or constructed on site using a combination of compatible components such as flue liner (wall directly in contact with the smoke), and possibly also insulation and outer casing (wall) that may be supplied by different manufacturers or by the same manufacturer.

• Relining: operation involving the installation of a specific pipe in an existing shaft (even if newly constructed) made of non-combustible materials, free from obstructions and for single use.

Components and accessories of a chimney

Key

1 Chimney
2 Flow path
3 Smoke discharge tube
4 Thermal insulation
5 External wall
6 Outer lining
7 Flue outlet section
8 Multiwall chimney
9 Connector
10 Flue pipe
11 Heat generator

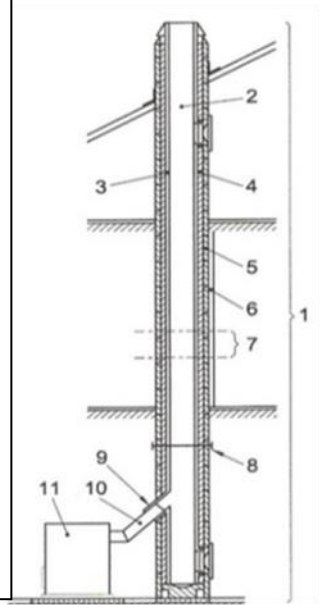

9.3.2 FLUE OUTLET / FLUE SYSTEM COMPONENTS

Every chimney must have minimum number of components as laid down by standard UNI EN 1443 which are also indicated in the figure below:

ATTENTION: Wall outlets, that is outlets installed on the outer front wall without the use of a chimney/flue outlet /flue pipe to convey the combustion products to the roof, are strictly prohibited.

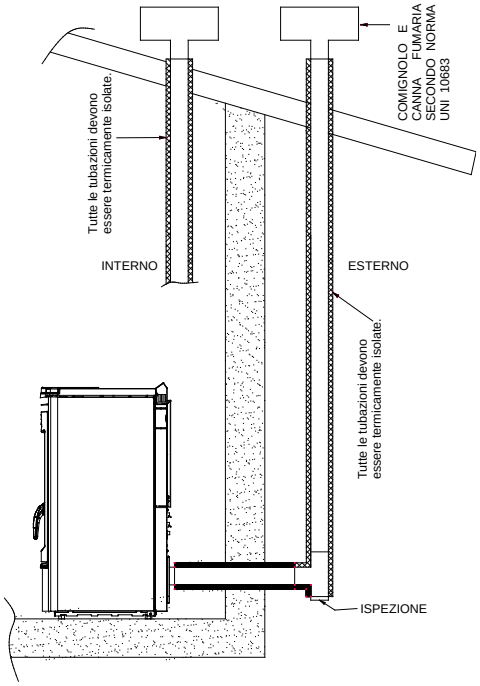

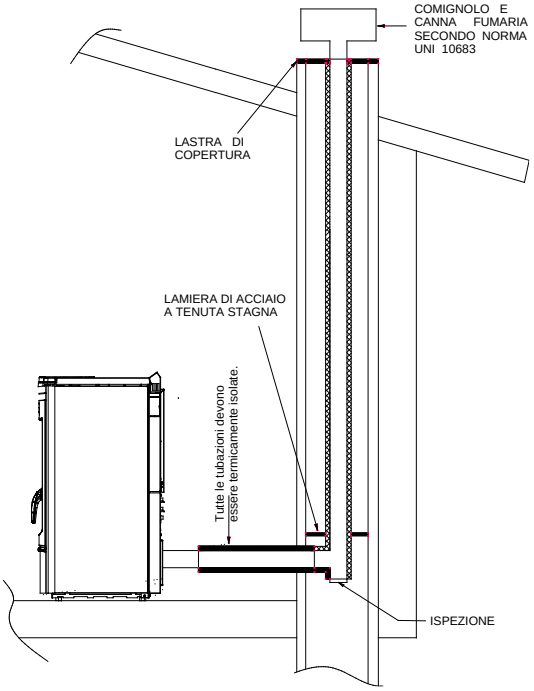

LEGENDA	**KEY**
COMIGNOLO E CANNA FUMARIA SECONDO NORMA UNI 10683	CHIMNEY CAP AND FLUE OUTLET ACCORDING TO UNI 10683 STANDARD
Tutte le tubazioni devono essere termicamente isolate	All the pipes must be thermally insulated
ISPEZIONE	INSPECTION
ALTEZZA SUPERIORE A 4 metri	HEIGHT MORE THAN 4 m.
Pendenza non inferiore al 5%	Minimum slope 5%
2 metri MAX	2 metres MAX
2-3 metri MAX	2-3 metres MAX.
INTERNO	INTERNAL
ESTERNO	EXTERNAL
LASTRA DI COPERTURA	COVER SLAB
LAMIERA DI ACCIAIO A TENUTA STAGNA	WATERTIGHT STEEL SHEET

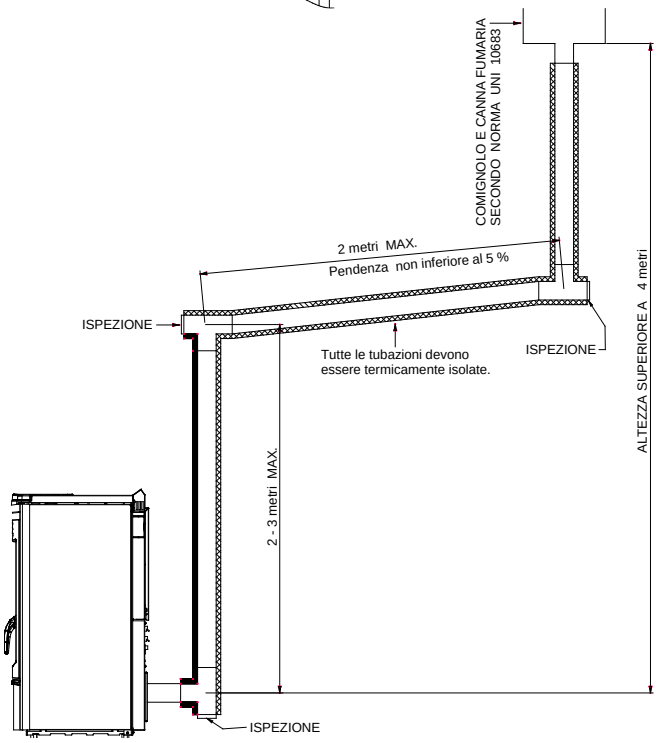

9.3.3 CONTROLS PRIOR TO INSTALLING THE APPLIANCE

The user must possess a certificate of conformance for the flue outlet (Ministerial Decree 22 January 2008, no. 37).
The flue outlet must be built in compliance with UNI 10683.
The smoke exhaust shown in the following figures is the best solution to ensure the discharge of smoke even when the fan is not operational, such as for example if there is an electrical power failure. A minimum drop of 2/3 metres is required between the T terminal on the outside of the building and the outlet at the back of the generator, to ensure that residual combustion smoke is discharged in the case described above (otherwise the residues would stagnate inside the firebox and exhaust into the environment with added the possibility of explosions). The figures illustrate the best solution for discharging the smoke out through the roof or into the flue outlet. If you prefer to exhaust the smoke from the roof insert a union tee with inspection cap, connecting brackets suitable for the height of the flue outlet, flashing that crosses the roof and chimney cap to protect against bad weather conditions.
If you decide to use the classic masonry exhaust provide a union tee with inspection cap and suitable supporting brackets. If the flue outlet is too big it is necessary to insert a stainless steel or porcelain-coated steel tube with a diameter not exceeding 150mm. Seal area where the inlet and outlet part of the smoke exhaust meets the wall. It is strictly forbidden to apply mesh to the end of the outlet tube , as it could cause the appliance to malfunction. If the smoke tube is installed in a fixed position it is advisable to provide inspection openings for clean-out purposes especially in the horizontal sections. See the diagram. These openings are essential to allow for the removal of ash and unburned products which tend to accumulate along the discharge path. The appliance functions with the combustion chamber in a vacuum, while the discharge of smoke to the flue outlet has a slight pressure, consequently it is imperative to ensure that the discharge system is hermetically sealed. The smoke discharge tube must be made from suitable materials such as for example: porcelain-coated steel tubes, and the various fittings sealed with red silicone (resistant to 350°C). The outer casing of the tube must be made with insulating material (mineral wool, ceramic fiber) or use pre-insulated tubing.
THE FLUE OUTLET MUST BE USED ONLY FOR THE APPLIANCE.

It must be possible to inspect and remove all the smoke tube sections for clean-out purposes.
ATTENTION: if the flue outlet is not sufficiently insulated and /or if it is too long it could generate condensation. It is advisable to provide a condensation drain near the smoke outlet of the appliance. The appliance must always and only be installed in a single flue outlet system dedicated exclusively to the appliance.
If the generator is connected to a non-compliant flue system the appliance could rapidly deteriorate due to an abnormal, continuous overheating: in this case the damaged parts will not be covered by warranty.

IF THE CHIMNEY CATCHES FIRE DO NOT HESITATE TO CALL THE FIRE BRIGADE IMMEDIATELY.

10 – ALARMS

The appliance is programmed to communicate 7 alarms.

ATTENTION: The appearance of one of the alarms described below, does not necessarily imply a defect in the product, but simply Thermorossi S.p.A.'s intention to inform the user of the need for corrective actions in order to guarantee maximum safety, greater reliability and high performance of the appliance .

The alarms are listed below:

This meassge appears when during the **WORK** stage the temperature of the smoke drops below a preset threshold: this means that the appliance is shutting off due to lack of pellets. To reset the alarm the power to the appliance must be switched off then on by turning the switch 0-1 located on the power panel. **It is mandatory to empty and clean the brazier**, and then to fill the pellet tank before repeating the START phase. It could be that the screw feeder is completely empty, so the start up sequence may have to be carried out twice.

This appears if, after the **START** sequence, the smoke has not reached a suitable temperature. To reset the alarm the power to the appliance must be switched off then on by turning the switch 0-1 located on the power panel.
It is mandatory to empty and clean the brazier before repeating the START phase: pellets emptied from the brazier must not be fed into the tank.

This occurs when the smoke outlet is partially blocked. To reset the alarm the power to the appliance must be switched off then on by turning the switch 0-1 located on the power panel.
Before restarting the appliance check for any irregularities such as blocked flue outlet, open firebox door.
Do not start up the appliance until the problem has been identified and solved
It is mandatory to empty and clean the brazier before repeating the START phase:

This appears when the water temperature in the appliance exceeds 95°C. **After having verified and solved** the causes for the overtemperature, unscrew the plastic cover of the reset thermostat located on the back and press the button (the appliance can only be reset when its temperature has dropped considerably). To **reset the alarm** the power to the appliance must be switched off then on by turning the switch 0-1 located on the power panel.
It is mandatory to empty and clean the brazier before repeating the START phase:

Appears when the smoke thermocouple is damaged or absent. Contact the technical assistance service

Activates when the smoke suction unit revolution sensor detects a very slow rotation speed: check the flue pipes and the flue outlet. If the problem persists contact the technical assistance service.

Trips when the smoke suction unit revolution sensor fails to detect any rotation. The smoke suction unit or the rotation sensor are not working. Contact the technical assistance service.

ALARM S1 DISCONNECTED: The optional sensor S1 is interrupted or disconnected.

ALARM S2 DISCONNECTED: The optional sensor S2 is interrupted or disconnected.

ALARM S acs DISCONNECTED: The optional sensor of domestic hot water (ACS) is interrupted or disconnected.

ALARM S t.a. DISCONNECTED: The optional room sensor is interrupted or disconnected.

11 - ELECTRICAL WIRING

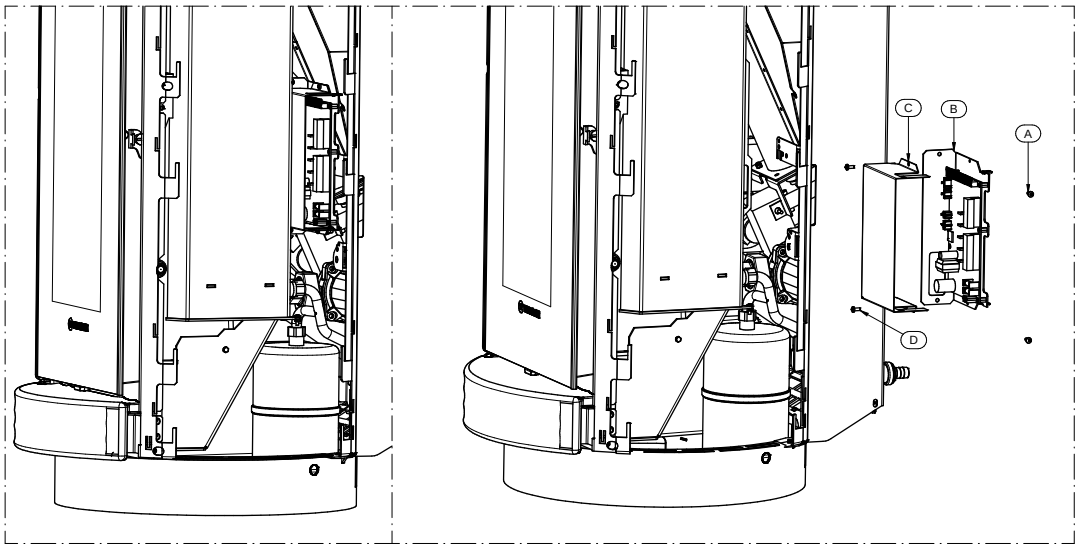

This operation must be exclusively performed by qualified professional staff, as set forth by Decree no. 37 of 22nd January 2008 and applicable laws on the subject. Before performing said task, make sure the power supply cable is disconnected from the electrical power socket.

To access the electronic board it is necessary to follow the instructions indicated in the above drawings:
-Remove the casing on the RH side of the generator.
- Remove the 2 screws A and move the board with its support.
- Undo the screws D and remove support
C.
- Now you can access the board B.

PIDRA 18

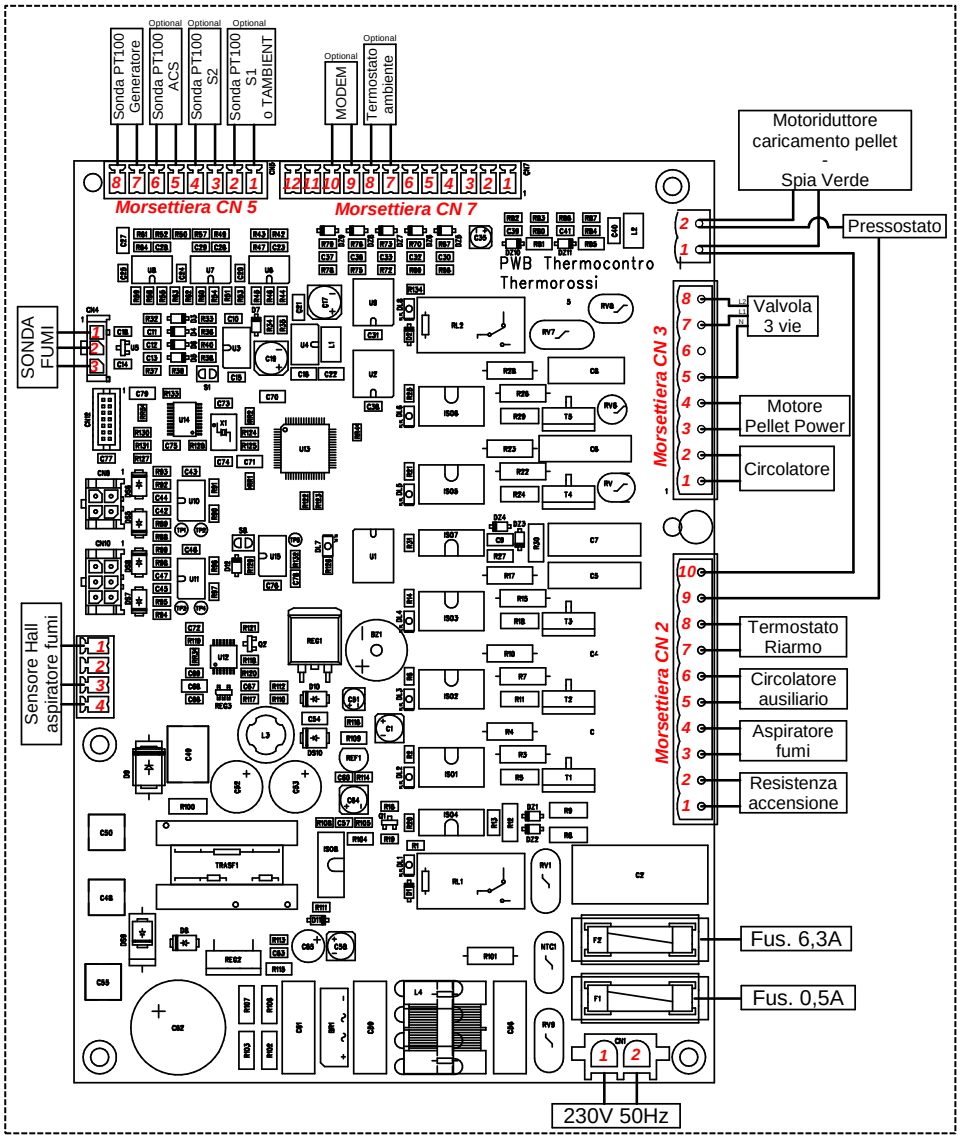

LEGENDA	**KEY**
optional	optional
Sonda PT 100 Generatore	Sensor PT 100 Generator
Sonda PT 100 ACS	Sensor PT 100 Domestic hot water (ACS)
Sonda PT 100 S2	Sensor PT 100 (S2)
Sonda PT 100 S1 o TAMBIENT	Sensor PT 100 (S1) or TAMBIENT
Morsettiera CN5	Terminal block CN5
Modem	Modem
Termostato ambiente	Room temperature thermostat
Morsettiera CN7	Terminal block CN7
Sonda fumi	Smoke sensor
Motoriduttore caricamento pellet - Spia Verde	Pellet loading gearmotor - Green indicator light
Pressostato	Pressure switch
Morsettiera CN3	Terminal block CN3
Valvola 3 vie	Three-way valve
Motore Pellet Power	Pellet Power Motor
Circolatore	Circulating pump
Sensore Hall aspiratore fumi	Hall Sensor smoke suction unit
Morsettiera CN2	Terminal block CN2
Termostato riarmo	Reset thermostat
Circolatore ausiliario	Auxiliary circulating pump
Aspiratore fumi	Smoke suction unit
Resistenza accensione	Lighting heater
Fus. 6,3A	Fuse 6.3 A
Fus. 0,5A	Fuse 0.5A

12 – INFORMATION FOR THE SKILLED TECHNICIAN

12.1 MAIN COMPONENTS AND THEIR POSITION

SMOKE PRESSURE SWITCH
This is a safety switch that stops the screw feeder motor whenever necessary. The main cause for the pressure switch tripping is a blocked flue outlet or smoke exhaust pipe. Note that it is strictly forbidden to apply any kind of mesh screen to the end of the pipe. When the holes of the mesh clog up they create a plug that trips the pressure switch which stops the pellet feeder.

SCREW FEEDER MOTOR
This motor is powered at regular on/off intervals controlled by a microprocessor. The operation of this motor is affected when: The motor's thermal cutout trips; the pressure switch trips due to blocked smoke exhaust; the generator is shut down intentionally or the heater shuts down because it runs out of pellets; the manual reset thermostat trips.

SMOKE SUCTION UNIT
This is activated when the start up signal is given. Initially it activates at the maximum capacity, and then self adjusts to the optimal speed. To enable the evacuation of the smoke and for greater safety of the system, the smoke suction unit continues to operate for a preset period of time from when the appliance shuts off.

BRAZIER CLEANING MOTOR
This is a patented system that creates a continual movement of the combustion pellets inside the burner which consequently cleans the burner.

SMOKE SENSOR
Continually detects the outgoing smoke temperature. It authorises the passage from the Start stage to the Work stage.

EXPANSION TANK
This is a safety device for the appliance used to compensate the increased water volume in the appliance due to its increasing temperature (Attention: this tank is intended solely as protection for the appliance).

SAFETY THERMOSTAT WITH MANUAL RESET
When the temperature exceeds 98°C the pellet feed screw shuts down. After having verified and solved the causes for the overtemperature, reactivate the appliance by unscrewing the plastic cover of the thermostat and press the button (the temperature of the appliance must have dropped considerably).

SPARK PLUG
It is activated in the START phase. It heats the incoming air to the brazier up to 800°C, which promotes the first combustion of the pellets in the brazier.

AUTOMATIC PURGE VALVE
The function of this valve is to eliminate air residues inside the appliance body without the need for manual intervention. Consequently problems such as the following are eliminated:
• corrosive processes caused by the oxygen • noise generated by the passage of air in the tubes • air pockets in the heating bodies • cavitation in the circulator pumps.

SAFETY VALVE CALIBRATED AT 3 BAR
When the calibrated pressure is reached, the valve opens and, by discharging to the atmosphere it prevents the pressure in the system from reaching dangerous limits for the generator and for the components of the system. If it trips verify the reasons and solve the causes for the overpressure.
It is recommended to connect this valve to an outlet to avoid damaging the material around the appliance and to prevent damage caused by hot water under pressure.

SYSTEM CIRCULATING PUMP
This device conveys hot water produced by the appliance to the usage points. The circulating pump signal appears to indicate that it is operating.

12.2 GUIDELINES FOR CORRECT INSTALLATION

• Read this instruction booklet.
• The appliance must always be switched off from the control panel. It is forbidden to switch off the appliance by means of the main switch 0/I.
• The appliance must never be disconnected from the electrical power supply and the power supply must never be cut off during normal operation. Whenever the appliance is deliberately disconnected from the electric power supply smoke could be emitted into the room.
• Do not install the appliance with horizontal wall outlets only: Evacuation of products of combustion by natural draught must always be guaranteed as well. Unsuitable installation of the outlets could cause a forced shut down of the appliance due to overpressure of the exhaust smoke caused by a gust of wind.

• At the first startup, run the heater at the maximum power in a well-ventilated room, in order to dispose of the smoke generated by the complete dryness and baking of the silicates contained in the enamel coating of the combustion chamber.
• Do not install a grill or outlet terminal that could slow down the flow of the combustion gases: this would obviously cause the appliance to malfunction.
• Keep the appliance clean and check the burner as described in these instructions.
• Clean the smoke outlet regularly.
• Use good quality pellets: use of poor pellets can result in up to 50% less efficiency.
• The pellets must be stored in a well-ventilated, dry place.
• The generator door must always remain closed during normal operation.
• Do not touch hot outer surfaces, unless with special equipment.
• Do not pour the pellets directly into the brazier.
• Keep fuel and inflammable materials at a suitable distance.
• Use only original spare parts supplied by the manufacturer.

12.3 TROUBLESHOOTING CAUSE / SOLUTION

PROBLEM	POSSIBLE CAUSE	SOLUTION
PELLETS DO NOT DROP INTO THE BRAZIER	PELLET TANK IS EMPTY THE **"NO PELLET – CLEAN BURNER"** ALARM IS SHOWN ON THE DISPLAY	CLEAN THE BRAZIER AS INDICATED IN THIS USE AND MAINTENANCE GUIDE, THEN FILL UP THE TANK WITH PELLETS
	PELLET SCREW FEEDER BLOCKED BY FOREIGN OBJECT SUCH AS NAIL, NYLON, PIECE OF WOOD, THE "**NO PELLET – CLEAN BURNER**" ALARM IS SHOWN ON THE DISPLAY	CUT OFF THE POWER AND REMOVE THE FOREIGN OBJECT FROM THE TANK.
	SMOKE EXHAUST NOT FREE, OR WITH TERMINAL THAT OBSTRUCTS THE PASSAGE OF SMOKE, THE **"SMOKE NO OUT – CHECK OUTLET"** ALARM IS SHOWN ON THE DISPLAY	CLEAN THE BRAZIER AS INDICATED IN THIS USE AND MAINTENANCE GUIDE, THEN CHECK THE SMOKE EXHAUST AS IT COULD BE DIRTY OR BLOCKED
	OUTLET TERMINAL CLOGGED BECAUSE A GRILL OR TERMINAL HAS BEEN INSERTED WHICH PREVENTS THE FREE PASSAGE OF SMOKE, THE **"SMOKE NO OUT – CHECK OUTLET"** ALARM IS SHOWN ON THE DISPLAY	CLEAN THE BRAZIER AS INDICATED IN THIS USE AND MAINTENANCE GUIDE, THEN REMOVE THE TERMINAL AND REPLACE IT WITH A MORE SUITABLE ONE
	A LONG GUST OF WIND HAS CAUSED THE APPLIANCE TO GO INTO SAFETY MODE. THE **"SMOKE NO OUT – CHECK OUTLET"** ALARM IS SHOWN ON THE DISPLAY	CLEAN THE BRAZIER AS DESCRIBED IN THIS USE AND MAINTENANCE GUIDE, DE-ENERGISE THE APPLIANCE THEN POWER UP AGAIN
	THE PELLET FEED MOTOR IS NOT WORKING, THE **"NO PELLET – CLEAN BURNER"** ALARM IS SHOWN ON THE DISPLAY	CONTACT OUR TECHNICAL ASSISTANCE SERVICE FOR REPLACEMENT OF THE PART
	THE RESET THERMOSTAT TRIPS AND LOCKS THE GEARMOTOR, THE **"ALARM T.MAX – CHECK WATER CIRCUIT/PUMP"** MESSAGE IS SHOWN ON THE DISPLAY	CHECK THE RECEPTIVITY OF THE SYSTEM OR THE OPERATION OF THE CIRCULATING PUMP, WAIT FOR THE APPLIANCE TO COOL DOWN AND RESET THE THERMOSTAT
	APPLIANCE DOOR OPEN, THE **"SMOKE NO OUT – CHECK OUTLET"** ALARM IS SHOWN ON THE DISPLAY	CLOSE THE AIRTIGHT DOOR OF THE APPLIANCE
THE APPLIANCE ACCUMULATES PELLETS IN THE BRAZIER WHILE OPERATING	SMOKE EXHAUST NOT FREE, OR WITH TERMINAL THAT OBSTRUCTS THE PASSAGE OF SMOKE	CLEAN THE BRAZIER AS INDICATED IN THIS USE AND MAINTENANCE GUIDE, THEN CHECK THE SMOKE EXHAUST AS IT COULD BE DIRTY OR BLOCKED OR REMOVE THE TERMINAL AND REPLACE IT WITH A MORE SUITABLE ONE
	THE BRAZIER IS VERY DIRTY	CLEAN THE BRAZIER AS INDICATED IN THIS USE AND MAINTENANCE GUIDE
	THE APPLIANCE DOOR IS NOT TIGHT, THE GASKET IS WORN	FIRMLY CLOSE THE DOOR OR CONTACT THE TECHNICAL ASSISTANCE SERVICE FOR REPLACEMENT OF THE SEAL
	PELLET WITH ASH DEPOSIT GREATER THAN STANDARD OR OF DUBIOUS QUALITY	CLEAN THE BRAZIER AND SET OPERATING PROGRAM **LEVEL 2,** AS INSTRUCTED IN THIS USE AND MAINTENANCE GUIDE. IF THIS DOES NOT SUFFICE, CHANGE TO A BETTER QUALITY OF PELLETS
THE APPLIANCE LEAKS SMOKE INTO THE ROOM	OCCURS THE FIRST TIME THE APPLIANCE IS SWITCHED ON AS THE SILICONE PAINT IS BEING BAKED	RUN THE APPLIANCE AT HIGH POWER LEVELS FOR A FEW DAYS
	THE SMOKE EXHAUST IS NOT SEALED CORRECTLY	CHECK THE TIGHTNESS OF THE FLUE OUTLET, PARTICULARLY THE CONDITION OF THE EXHASUT PIPES AND THE TIGHTNESS OF THE SEALS
	IF SMOKE BEGINS TO LEAK FROM THE APPLIANCE TOWARDS THE END OF THE STARTUP SEQUENCE: DIRTY BRAZIER, STARTUP SUCCESSFUL BUT WITH CONSIDERABLE DELAY	CLEAN THE BRAZIER AS INDICATED IN THIS USE AND MAINTENANCE GUIDE
	IF SMOKE BEGINS TO LEAK FROM THE APPLIANCE TOWARDS THE END OF THE STARTUP SEQUENCE: DELAYED START BECAUSE THE SCREW FEEDER WAS EMPTY	CLEAN THE BRAZIER AS INDICATED IN THIS USE AND MAINTENANCE GUIDE, THEN FILL UP THE TANK WITH PELLETS
	OVERPRESSURE RELIEF VALVE TRIPPING	MAKE SURE THAT ALL THE CLEANING, ROUTINE AND EXTRAORDINARY MAINTENANCE INSTRUCTIONS SET OUT IN THIS USE AND MAINTENANCE GUIDE ARE STRICTLY ADHERED TO
THE APPLIANCE ENTERS ALARM MODE A FEW MINUTES AFTER THE START SEQUENCE HAS ENDED	DELAYED START BECAUSE THE SCREW FEEDER WAS EMPTY THE **"FAILED START – CLEAN BURNER"** ALARM IS SHOWN ON THE DISPLAY	CLEAN THE BRAZIER AS INDICATED IN THIS USE AND MAINTENANCE GUIDE, THEN FILL UP THE TANK WITH PELLETS
	START UP HAS BEEN GREATLY DELAYED BECAUSE THE BRAZIER IS DIRTY: THE **"FAILED START – CLEAN BURNER"** ALARM IS SHOWN ON THE DISPLAY	CLEAN THE BRAZIER AS INDICATED IN THIS USE AND MAINTENANCE GUIDE
THE APPLIANCE DOES NOT START UP	THE SPARK PLUG IS NOT WORKING THE **"FAILED START – CLEAN BURNER"** ALARM IS SHOWN ON THE DISPLAY	CONTACT THE TECHNICAL ASSISTANCE SERVICE FOR REPLACEMENT OF THE SPARK PLUG
	THE PELLET TANK OR SCREW FEEDER IS EMPTY THE **"FAILED START – CLEAN BURNER"** ALARM IS SHOWN ON THE DISPLAY	CLEAN THE BRAZIER AS INDICATED IN THIS USE AND MAINTENANCE GUIDE, THEN FILL UP THE TANK WITH PELLETS
	EXCESSIVE DRAUGHT IN THE FLUE OUTLET THE **"FAILED START – CLEAN BURNER"** ALARM IS SHOWN ON THE DISPLAY	HAVE THE FLUE OUTLET DRAUGHT CHECKED
	THE HOLE OF THE SPARK PLUG SEAT IS CLOGGED WITH COMBUSTION RESIDUES	CLEAN THE BRAZIER AS INDICATED IN THIS USE AND MAINTENANCE GUIDE
THE GLASS IS COVERED IN BLACK SOOT OR SHOWS HALOS	POOR QUALITY PELLETS THE APPLIANCE ACCUMULATES PELLETS IN THE BRAZIER	CLEAN THE BRAZIER AND SET OPERATING PROGRAM **LEVEL 2,** AS INSTRUCTED IN THIS USE AND MAINTENANCE GUIDE. IF THIS DOES NOT SUFFICE, CHANGE TO A BETTER QUALITY OF PELLETS
	THE APPLIANCE OPERATES WITH FREQUENT ON-OFF CYCLES	THE APPLIANCE SHOULD RUN FOR LONGER PERIODS OF TIME TO REDUCE THE NUMBER OF ON/OFF EVENTS
	THE FLUE OUTLET HAS POOR DRAUGHT	HAVE THE FLUE OUTLET DRAUGHT CHECKED AND IF NECESSARY MAKE THE APPROPRIATE MODIFICATIONS
	IF THE PRODUCT IS NEW THAT COULD BE CAUSED BY THE EVAPORATION OF SOLVENTS PRESENT IN THE SILICONE	CLEAN THE GLASS WITH A NON-ABRASIVE WET CLOTH

PROBLEM	POSSIBLE CAUSE	SOLUTION
THE TEMPERATURE OF THE APPLIANCE DOES NOT RISE	ROOM TEMPERATURE THERMOSTAT SET TOO LOW, APPLIANCE OPERATES INTERMITTENTLY	OPERATE FOR LONGER PERIODS OR AT A HIGHER POWER LEVEL BY SETTING A HIGHER ROOM TEMPERATURE
	SURFACE AREA TO HEAT IS TOO BIG OR TOO COLD	OPERATE FOR LONGER PERIODS OR AT A HIGHER POWER

	CEILINGS ARE VERY HIGH OR WITH HIGH DISPERSION OF HEAT	LEVEL BY SETTING A HIGHER ROOM TEMPERATURE. IF NECESSARY CONTACT A HEAT TECHNOLOGY EXPERT TO MAKE A CORRECT CALCULATION OF THE REQUIRED POWER
	POOR QUALITY PELLETS	CHANGE TO AN APPROVED TYPE OF PELLET AS INDICATED IN THIS USE AND MAINTENANCE GUIDE
THE APPLIANCE IS SWITCHED OFF AND THERE ARE SOME UNBURNT PELLETS IN THE BRAZIER	PELLETS RUN OUT WHILE THE APPLIANCE IS OPERATING, THE **"NO PELLET – CLEAN BURNER"** ALARM IS SHOWN ON THE DISPLAY	CLEAN THE BRAZIER AS INDICATED IN THIS USE AND MAINTENANCE GUIDE, THEN FILL UP THE TANK WITH PELLETS
	EXCESSIVE DRAUGHT IN THE FLUE OUTLET THE **"NO PELLET – CLEAN BURNER"** ALARM IS SHOWN ON THE DISPLAY	HAVE THE FLUE OUTLET DRAUGHT CHECKED AND IF NECESSARY MAKE THE APPROPRIATE MODIFICATIONS
THE TIME DOES NOT REMAIN IN THE MEMORY	THE BUFFER BATTERY INSTALLED IN THE CONTROL PANEL FACEPLATE IS DEAD	CONTACT THE TECHNICAL ASSISTANCE SERVICE FOR REPLACEMENT OF THE BATTERY
THE HOURLY PROGRAM IS NOT COMPLIED WITH	THE USER HAS NOT ENABLED IT	PRESS THE CLOCK BUTTON TO ENABLE IT AS INSTRUCTED IN THIS USE AND MAINTENANCE GUIDE
	THE BUFFER BATTERY INSTALLED IN THE CONTROL PANEL FACEPLATE IS DEAD	CONTACT THE TECHNICAL ASSISTANCE SERVICE FOR REPLACEMENT OF THE BATTERY
	AN INCORRECT PROGRAMMING PROCEDURE WAS CARRIED OUT	VERIFY THE TIMES SET IN THE CHRONO FUNCTION
THE BRAZIER CLEANING MECHANISM IS WORN	POOR QUALITY PELLETS CONTAINING CHEMICAL BINDERS	CHANGE TO AN APPROVED TYPE OF PELLET AS INDICATED IN THIS USE AND MAINTENANCE GUIDE
	NOT ENOUGH OXYGEN FOR COMBUSTION	CONTACT TECHNICAL ASSISTANCE FOR REGULATION OF THE COMBUSTION
THE BRAZIER CLEANING MECHANISM DOES NOT WORK	THE MOTOR OF THE BRAZIER CLEANING MECHANISM IS FAULTY	CONTACT TECHNICAL ASSISTANCE FOR REPLACEMENT OF THE MOTOR
THE APPLIANCE IS IN STOP MODE	ZONE VALVES ARE PRESENT IN THE SYSTEM AND THEY ARE ALL CLOSED	OPEN AT LEAST ONE ZONE IN ORDER TO ENSURE ADEQUATE DISSIPATION OF THE HEAT PRODUCED
	THE CIRCULATING PUMP DOES NOT WORK	CONTACT OUR TECHNICAL ASSISTANCE SERVICE FOR REPLACEMENT OF THE PART
	THE APPLIANCE IS SET AT A POWER LEVEL THAT IS TOO HIGH AND THE SYSTEM CANNOT ABSORB THE HEAT PRODUCED	SET THE APPLIANCE IN AUTOMATIC MODE

IF THE REMEDIES SUPPLIED HERE DO NOT SOLVE THE PROBLEM YOU HAVE ENCOUNTERED OR IF YOU REQWUIRE SPARE PARTS CONTACT AN AUTHORISED TECHNICAL SUPPORT CENTRE

Code 70030743 11/2020

THERMOROSSI

FireLovers

THERMOROSSI S.p.A.
Via Grumolo, 4 (Z.I.) 36011 Arsiero (VI) - ITALY
Fax 0445.741657 - www.thermorossi.com - info@thermorossi.it